Green Engineering in Hybrid Technology

CADES
Inspiring Engineering Innovation

axis aerospace & technologies

axis

Anil Lall, Engineering Manager
Cades Digitech Ltd, UK

Contents

1. Overview — Slide 3
2. Background and Design Approach — Slide 5
3. Basic Considerations — Slide 11
4. Hybrid Drive Pack Layout — Slide 13
5. Appendices — Slide 17

Overview

- Cades Digitech is a subsidiary company of the Axis Aerospace & Technologies Group which is an multi-national engineering consultancy organisation operating in the aerospace, defence, automotive and industrial products, and heavy engineering sectors.
- As part of the Global effort to reduce greenhouse gas emissions from the current huge level of energy sourced from fossil fuels, Axis identified some focus areas where our specialist skills and engineering expertise can be deployed to contribute to the efforts of the larger worldwide community.
- Compact cars account for a large proportion of the total private vehicle population globally. These are estimated to be about 40% of all cars in Europe and as much as 80% in emerging economies such as China and India, which already have an estimated 45 million private cars on their roads.
- With continued rapid economic growth in these countries there is ever increasing pressure on the environment as well as on the world supply of crude oil.
- Direct reduction in “Tank to Wheel” emissions with no hidden additions in emissions from “Well to Tank” processes become more important in view of the above considerations.
- Additionally no infrastructural bottlenecks or product limitations restricting the vehicle usage are another important aspect to be kept in view.
- The relatively low power requirement of compact cars can be met by a low cost Hybrid drive with only limited ingress into utility space – critical for compact cars.

Overview (Contd.)

- Of the 3 types of Hybrid Drives generally used, we have selected the Parallel Hybrid option as this is most easily retro-fitted to existing vehicles – and also costs less to manufacture since it is inherently less complex.
- Our proposed Parallel Hybrid Drive can be engineered to replace an existing engine with minimal changes in the base vehicle, and makes possible a huge saving of fuel consumption (overall typically less than half the fuel consumption of equivalent gasoline driven cars is usually possible from Diesel Parallel Hybrids). The environmental benefits coupled with economic benefits to drivers make it a very attractive solution.
- We have also found that there are significant opportunities in respect Wind Turbines for improving the prevalent design of structures and drive systems.
- Projects have hence been initiated within our own organization with the aim of developing easy-to-implement solutions to achieve improved fuel efficiency of road vehicles and an investigation of new design approaches for construction of wind power generation systems.
- We are thus currently working on:
  1. **Development of a compact Hybrid Power Pack for small passenger and goods road vehicles (illustrations in Slide 9)**
  2. **Development of improved efficiency Wind Power Generators which can be used for both offshore and onshore location with emphasis on better energy yield and lower maintenance than the present generation of this type of equipment (illustrations in Slide 18 - Appendix 2)**

Background and Design Approach

- **Development of low cost Hybrid Drive Train for small cars**
  - Early work has demonstrated that in road vehicle applications the power rating of IC engine prime movers is provided on the basis of peak torque capability for short term demand for vehicle acceleration/steep gradient climbing etc
  - We find as a general rule, that an “averaged” power of a little over one-third of the typical automotive rating of a passenger road vehicle is required for more than 90% of vehicle usage.
  - Higher torque required for acceleration and climbing gradients is typically for short durations and usually needed in time-separated events such as pulling away from a stop or overtaking at speed etc.
  - City driving of course has a very pronounced characteristic of stop-start and low speeds. An extreme example is illustrated in the next slide (6) depicting typical work day conditions measured in New York City.
  - The mixed cycle road fuel consumption test published by the Vehicle Certification Agency (VCA) of the UK Government Department for Transport (DfT) is based on metrics used in current European Commission practice. The test is shown in Slide 7.
  - From an analysis of automotive ratings of engines powering currently available compact cars we found these to be typically in the range of 75 – 90 bhp for petrol (gasoline) models and 65 – 80 bhp for diesel models.

Background and Design Approach (contd.)

EXAMPLE OF CITY DRIVING PATTERN

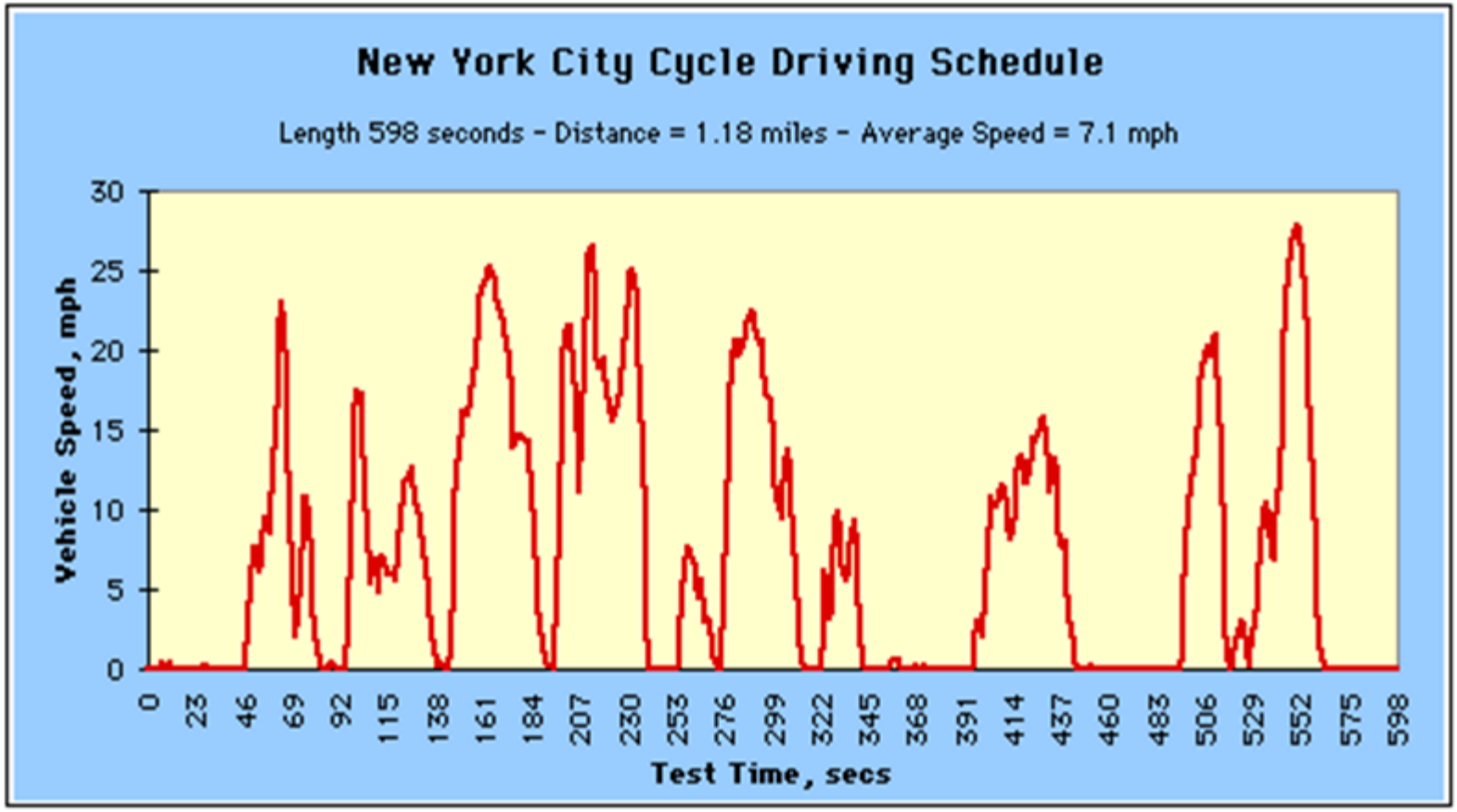

Background and Design Approach (contd.)

Mixed Cycle Test of the Vehicle Certification Agency (VCA) of the UK Department for Transport (DfT)

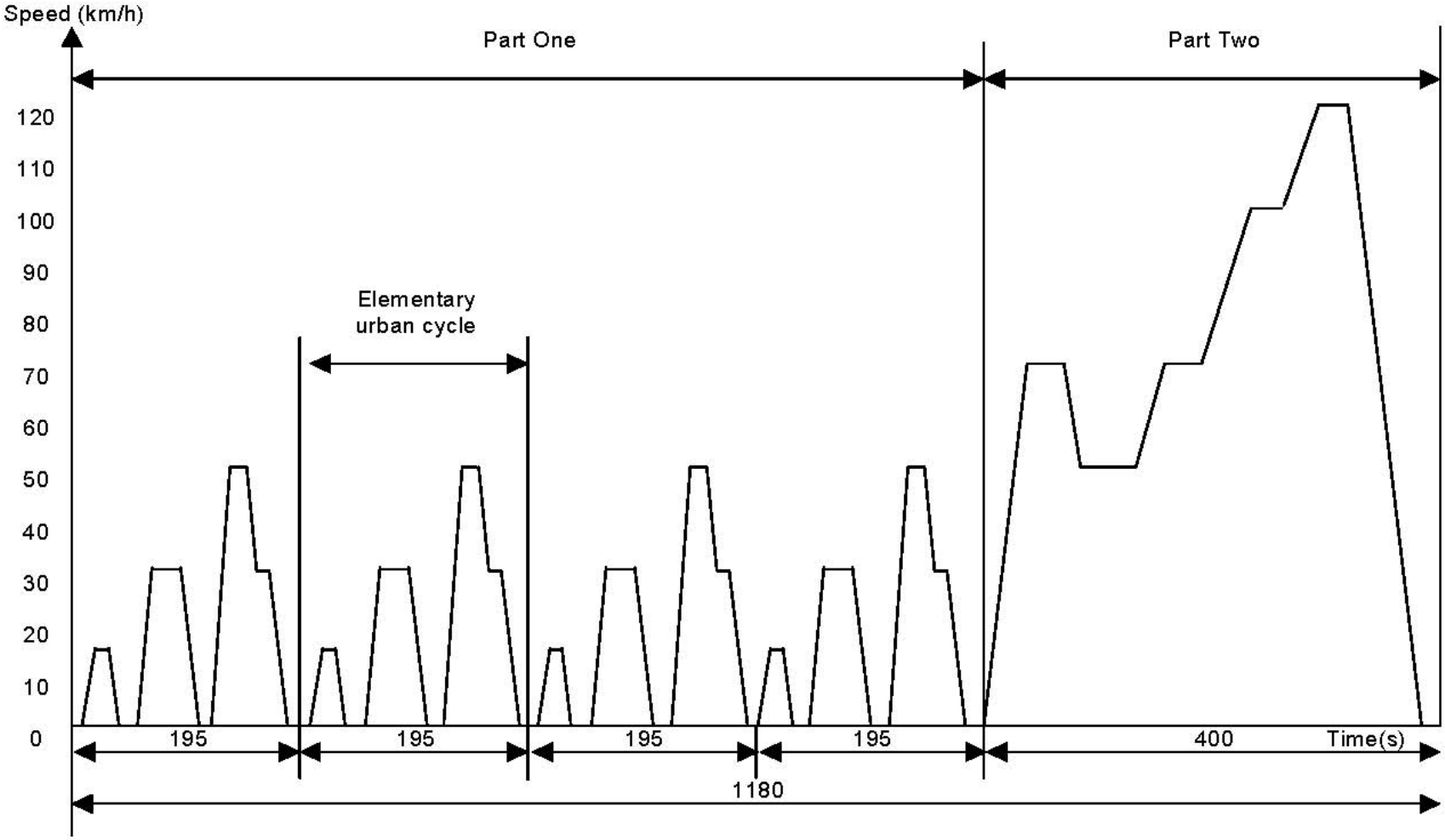

Background and Design Approach (contd.)

- **Development of low cost Hybrid Drive Train for small cars**
  - For a vehicle with base diesel automotive power rating of 70 -75 bhp an equivalent parallel hybrid drive with a diesel engine of 28- 30 bhp (about 40%) is adequate to propel the vehicle for virtually all long duration continuous loads.
  - A compact package incorporating lower power diesel engine as above along with an electric motor/generator torque booster becomes an attractive option to replace existing IC engines in small passenger and goods vehicles currently found on roads all over the world – and particularly in Developing Economies where fuel costs are a major consideration for vehicle users
  - We have accordingly designed a 1-cylinder automotive diesel engine for this special application as illustrated in the next Slide (9)
  - The program has been phased into 2 stages to facilitate development of this engine with initially a naturally–aspirated version (delivering a lower power output but with common main components and running gear) used for initial validation before the final turbo-charged version is prepared for vehicle trials
  - The initial non-turbo engine is used to power a very compact Diesel Generating Set of 6 kW output with special characteristics made possible from underlying benefits available from use of the automotive version. (Some of these are listed in Slide 10 which contains images of the generating set)

Background and Design Approach (contd.)

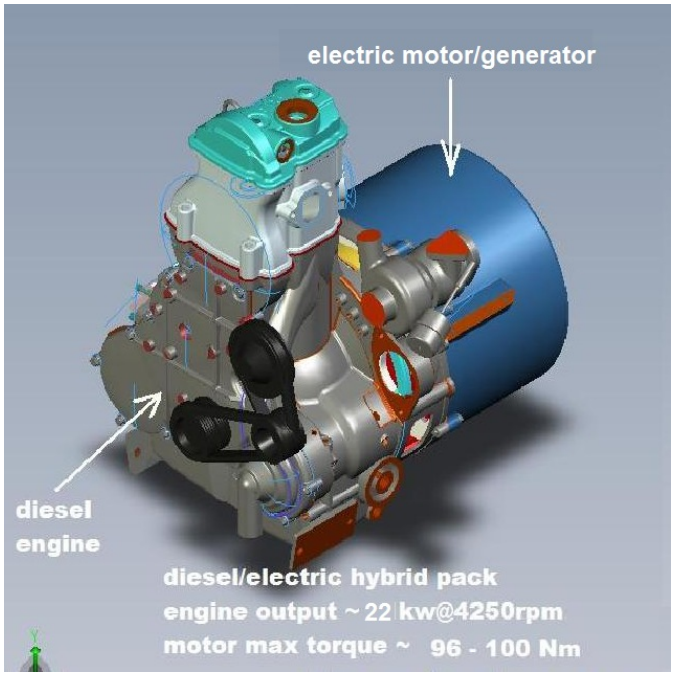

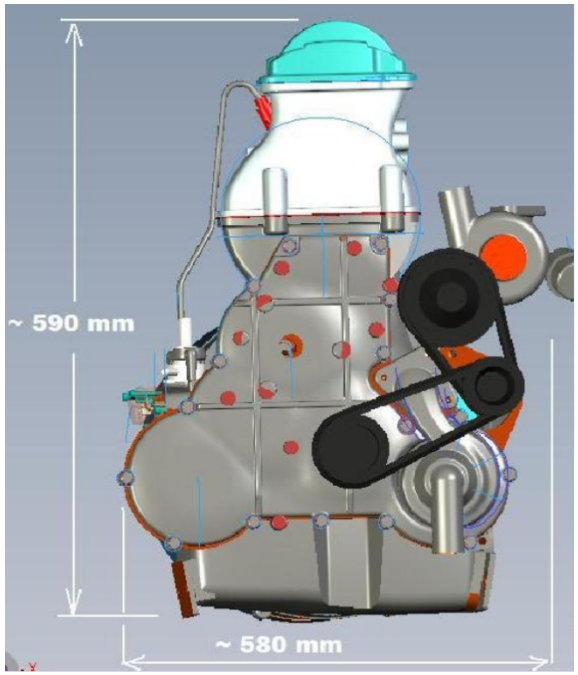

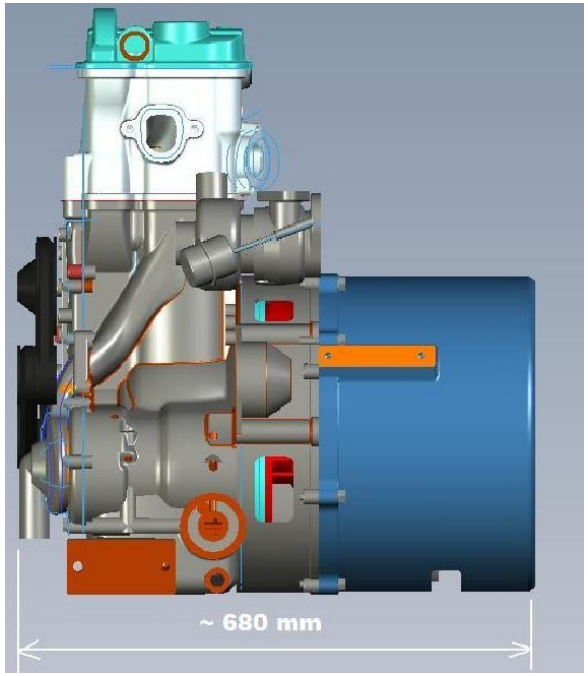

Diesel Electric Parallel Hybrid Drive Pack

- Overall length x height x width:- approx. 680mm x 590mm x 580mm
- Engine power rating (automotive):- 23 kW
- Engine peak torque:- 55Nm
- Electric motor max torque:- 150Nm
- Total weight of hybrid drive pack:- ~75Kg
- Battery storage capacity: ~250 Amp Hr
- Total weight of Lead Acid/NiMH battery pack:- ~ 80Kg/70Kg

Background and Design Approach (contd.)

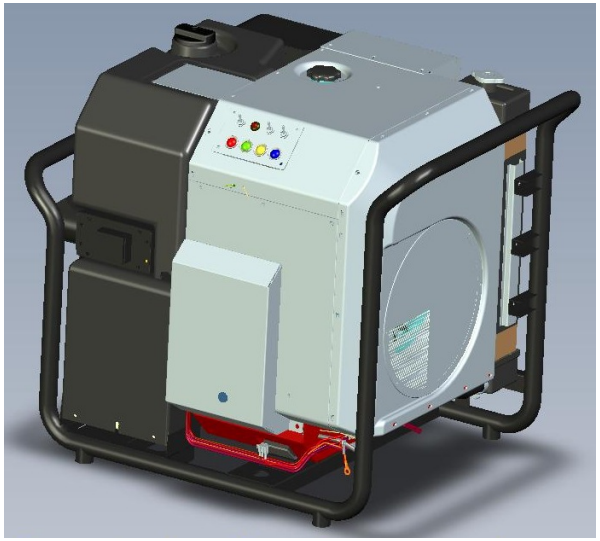

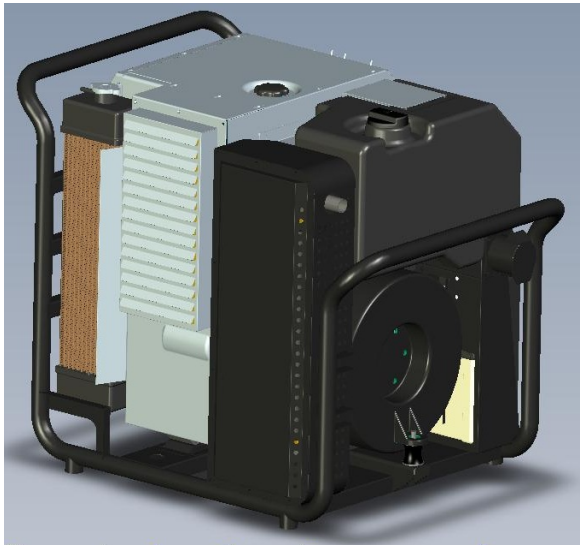

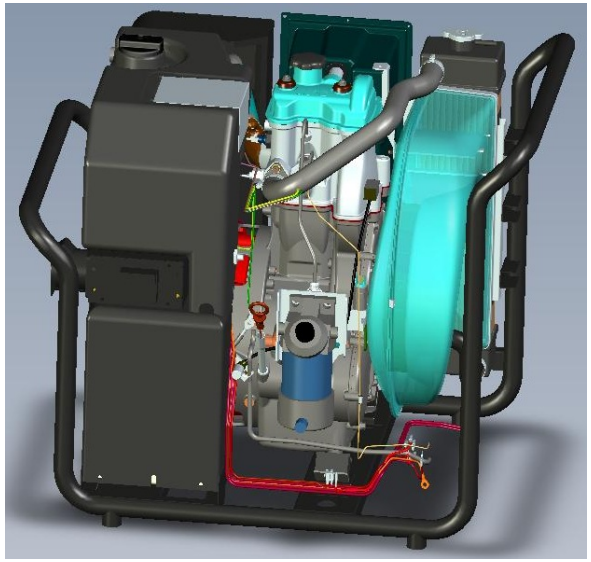

- World's most compact 6 kW diesel genset
- Twin primary balance shafts for full primary balance
- Low noise radiation (< 70 db)
- Low weight (dry 75 kg)
- Excellent engine fuel consumption and high capacity fuel tank gives 15 hours running time at average load
- Genset base frame is designed for easy lifting/handling

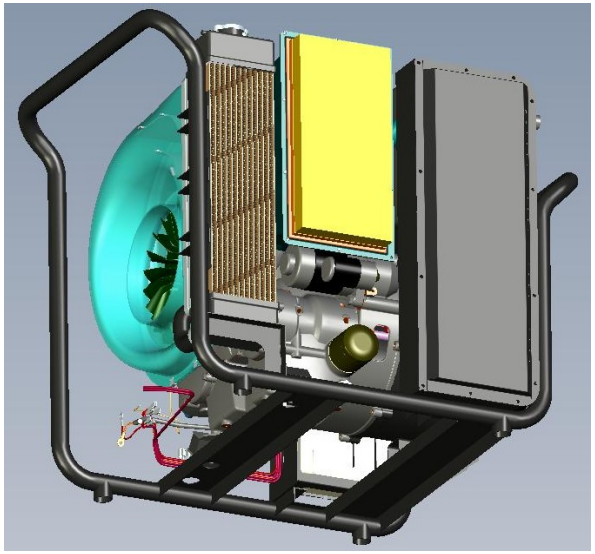

The above distinctive qualities of the new Generating Set make it very appropriate for use as standby power in millions of urban middle class homes/apartments in India. These typically have 2 air conditioners but are subject to frequent power cuts. Initial prototypes are now being manufactured with testing scheduled for later this year.

Basic Considerations

TYPICAL PROFILE OF CURRENT COMPACT DIESEL CARS

KERB WEIGHT	~ 1000 KG
GROSS VEHICLE WEIGHT	~ 1350 KG
SEATING CAPACITY	- 4 ~ 5
LUGGAGE SPACE	~ 200 LITRES
ENGINE	
NO OF CYLINDERS	- 4
SWEPT VOLUME	- 1200 – 1400 CC
FUEL	- DIESEL
TECHNOLOGY	
DIESEL	- CRDI, TURBO
MAX TORQUE	~ 150 Nm
FUEL CONSUMPTION (COMBINED)	- 75 - 80 mpg (3.4 – 3.6 l/100km)
ESTIMATED CO2 EMISSIONS	- 90 – 110 g/km

Source: VCA – (UK Department of Transport) Combined Fuel Consumption Figure

Basic Considerations (Contd.)

PERFORMANCE TARGETS WITH NEW DIESEL HYBRID DRIVE PACK

➢ CO_2 EMISSIONS	~ 60 g/km
➢ VEHICLE DRIVING PERFORMANCE	- NO CHANGE
✓ MAX SPEED	(except for sustained driving at over legal limit for long periods)
✓ TIME TO ACCELERATE FROM 0 ~ 60 KMPH	
✓ ABILITY TO NEGOTIATE GRADIENT AT 60 KMPH	
✓ MAX SPEED	
➢ FUEL CONSUMPTION (COMBINED)	- 125 - 135 mpg
➢ REDUCTION IN USABLE LUGGAGE SPACE	- 10% MAX
➢ ENGINE POWER OUTPUT AT MAX SPEED	- 30 PS (AUTOMOTIVE)
➢ STORAGE BATTERY PACK CAPACITY	- APPROX 250 Amp Hr
➢ ELECTRIC DRIVE TORQUE AUGMENTATION	- APPROX 100 Nm (for up to ~ 30 min)

Hybrid Drive Pack Layout

Considerations for choice of power ratings and layout of Hybrid Drive Pack

- Typical base diesel small car automotive power rating is about 70 bhp at 4300 - 4500 rpm
- The main propulsion diesel component of a hybrid pack is hence required to be about 28 bhp at similar maximum engine speed
- From a study of available battery types it was found that standard Lead-Acid or Nickel Metal Hydride batteries offered the best options as the energy storage requirement is quite modest for the type of drive considered.
- Battery storage and discharge have substantial losses in both directions of energy flow
- To optimise overall thermal efficiencies for minimum vehicle fuel consumption, maximum use is made of power drawn from the engine with as little as possible use of battery stored energy to minimise attendant losses of charging and discharging of the battery system.
- The optimum engine fuel consumption near full load in the operating speed range 1900 – 2500 rpm is ~200 gm/kW hr
- Torque demand from base engine to be pitched at near optimum fuel consumption as far as possible
- It was found that the power/torque requirement for the VCA Mixed Cycle allows a surplus torque to be available for most of the test with the rated power selected for the vehicle size considered (Slide 15)
- Surplus engine power along with energy recovery from regenerative braking is used to recharge the battery pack during the test cycle

Hybrid Drive Pack Layout (Contd.)

- Fuel consumption thus expected from the test hence works out to 135 mpg (2.1litres/ 100km)
- Battery selection is considered in the context of initial cost and also number of recharging cycles before significant loss of storage capacity
- Lead Acid batteries allow more cycles for partial discharge with an estimated 1500 charging/discharging cycles possible if residual charge is maintained at 50%
- NiMH batteries similarly survive a large number of charging cycles if each discharge is no more than 50%
- Taking a boost torque at full capacity of 100 Nm we have a 30 minute availability at this output from either type of battery with 250 Amp Hr total storage capacity
- This will enable a climb of almost 25,000 feet on a 15 degree gradient at 60 mph and is clearly never likely to be required!
- 4 Deep Discharge Lead Acid batteries of 65 Amp Hr capacity or 6 NiMH batteries of 38 Amp Hr capacity are hence considered to be adequate for this drive pack
- The batteries as above have a total weight of approximately 80 Kg
- The engine and motor/generator portion of the Hybrid Drive Pack have a total weight of around 75 Kg – this saves approximately 55 Kg compared with a typical 4-Cylinder automotive diesel engine it will replace.
- Additional weight of the battery storage pack is hence only about 25 Kg after accounting for removal of the usual car battery which would not be required.

Hybrid Drive Pack Layout (Contd.)

VCA combined test speed map with required and available/surplus torque for compact passenger road vehicle considered

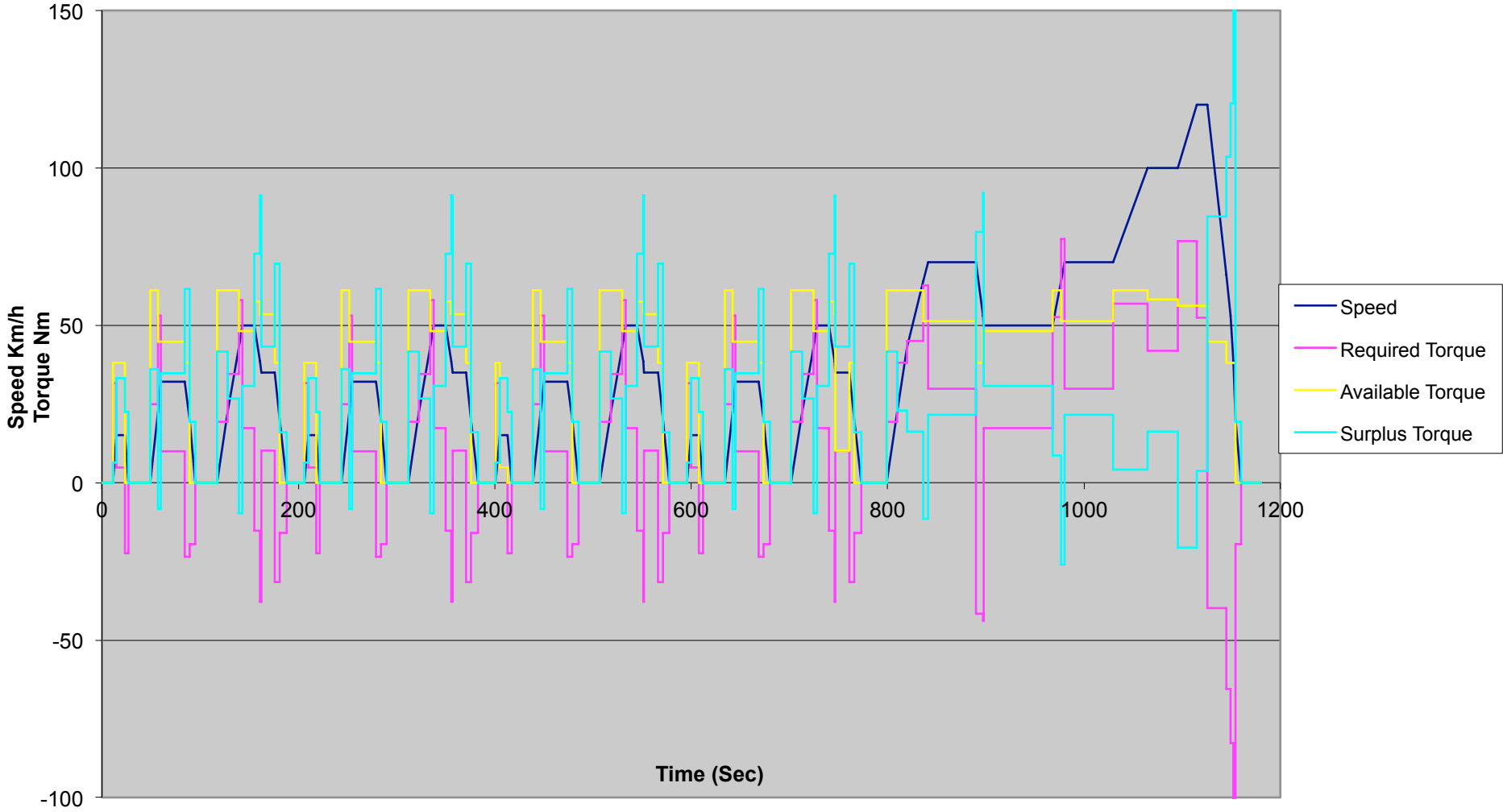

Hybrid Drive Pack Layout (Contd.)

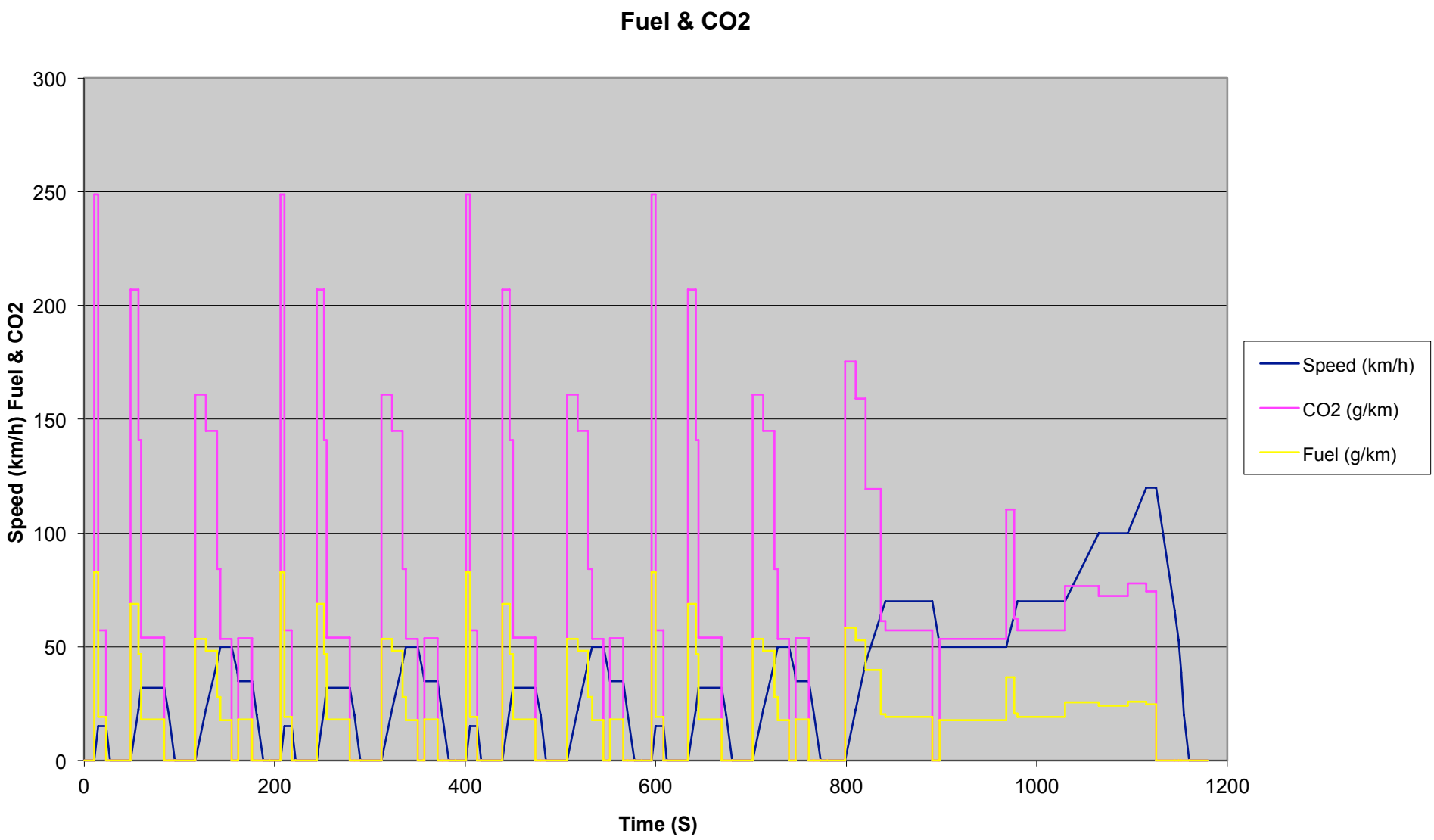

Appendix 1

Hybrid Technology: Generator / Diesel Engine Layout

- Possibility to develop a highly efficient 120-150 mpg hybrid generator package that can be fitted into existing small passenger cars.
- Benefit to customer of hybrid vehicle technology and associated benefits for large range of current non hybrid vehicles at a greatly reduced cost of retro fit when compared to new costs of Hybrid vehicles.
- Cost benefits of high efficiency fuel consumption and possibly also government environmental credit bonuses.

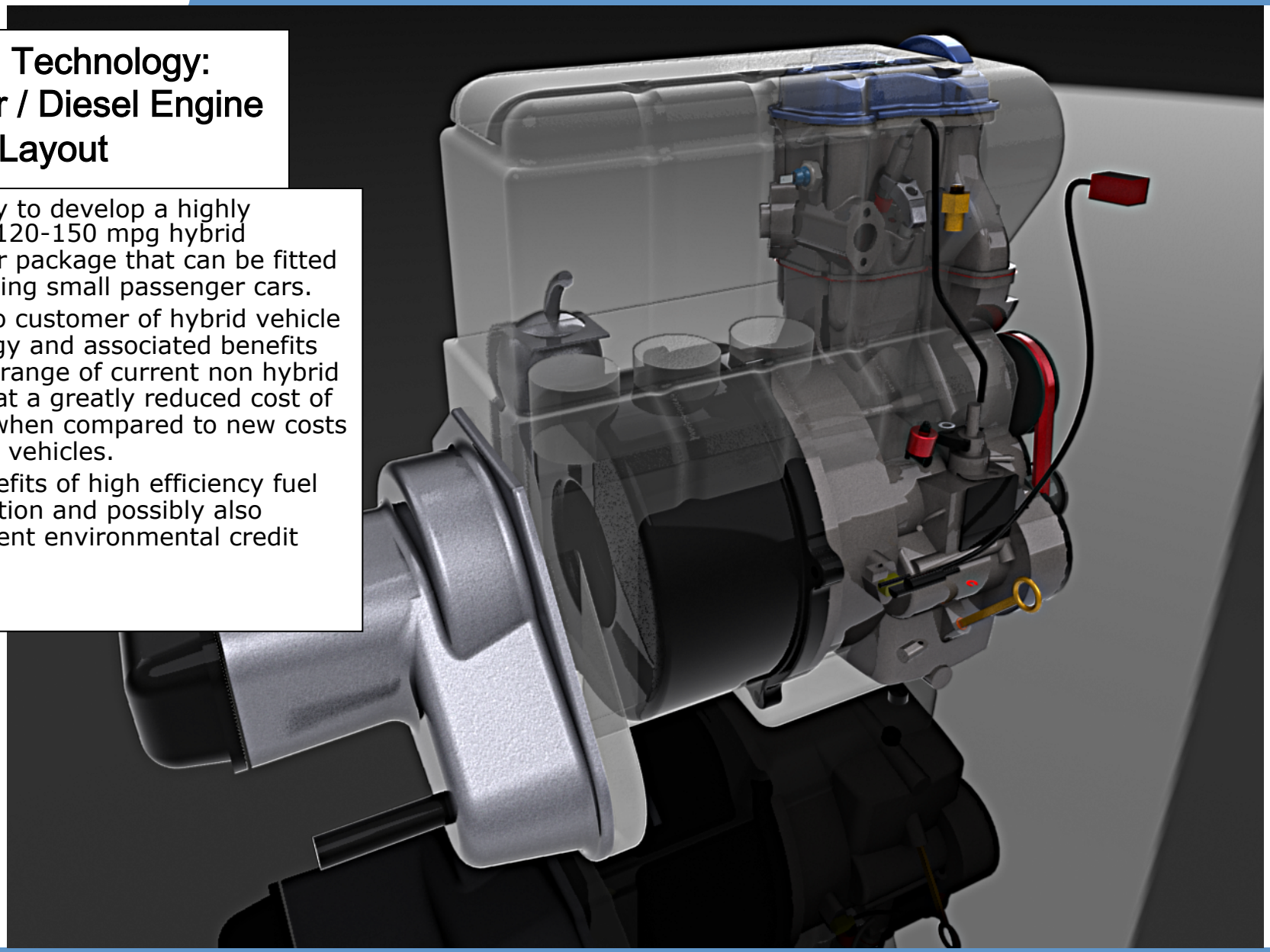

NEW VERTICAL AXIS WIND TURBINE ARRANGEMENT

- Vertical Axis Rotor is located at height to capture energy from higher wind speeds
- Drive is vertically coupled without gearbox
- Power transferred to near ground level
- Reduced presence of complex equipment at rotor height allows lower costs for maintenance access
- Hydraulic conversion of torque to drive electric power generation equipment near ground level

Thank You
Danke Schoën
Merci
Gracias
Obrigado
Hvala
Takk
Dziekuje
Jag tackar
Diolch yn fawr
Spasibo

visit us @ : www.axisitt.com / www.cadestech.com / www.axis.aero

For any enquiries email us @ Srinivas.Pulikam@axisitt.com (Or) Visit our stall in Hall 3