THE SCALZO PISTON DEACTIVATION ENGINE

(with or without Variable Compression Ratio)

The Ultimate Technology for Economical

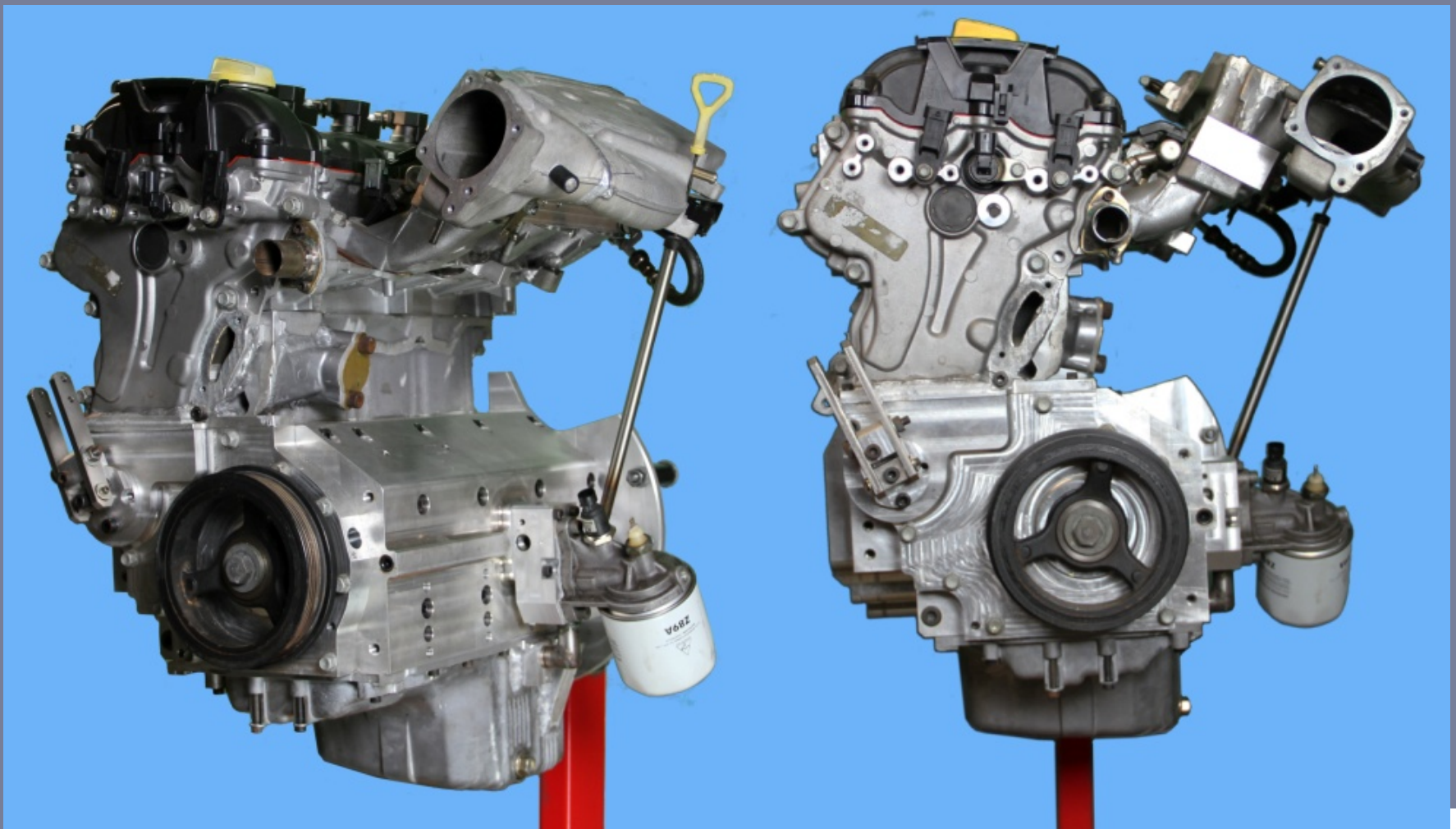

Scalzo Automotive Research Pty Ltd

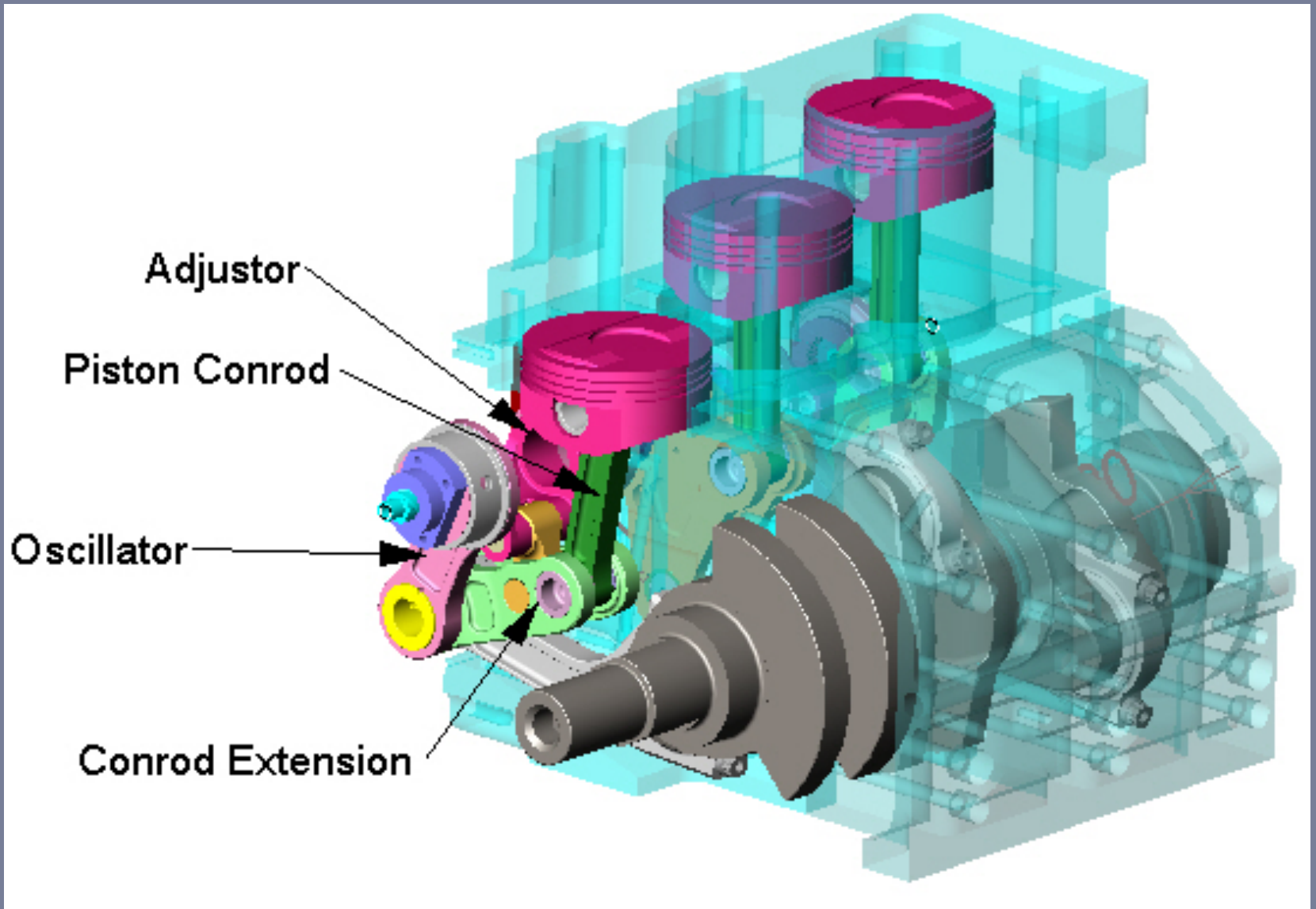

Figure 1 – Piston in the Activated Position

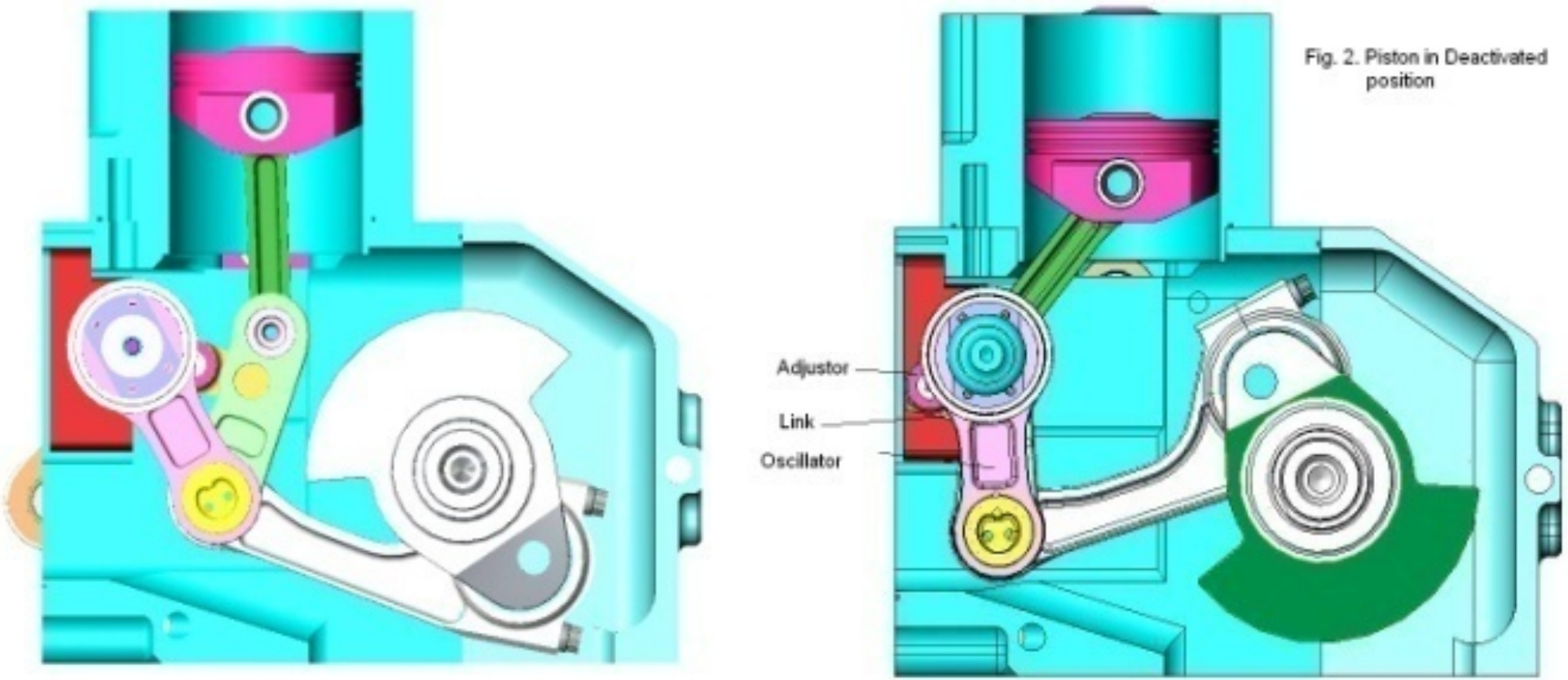

Figure 2 – Piston in the Deactivated Position (RHS Image)

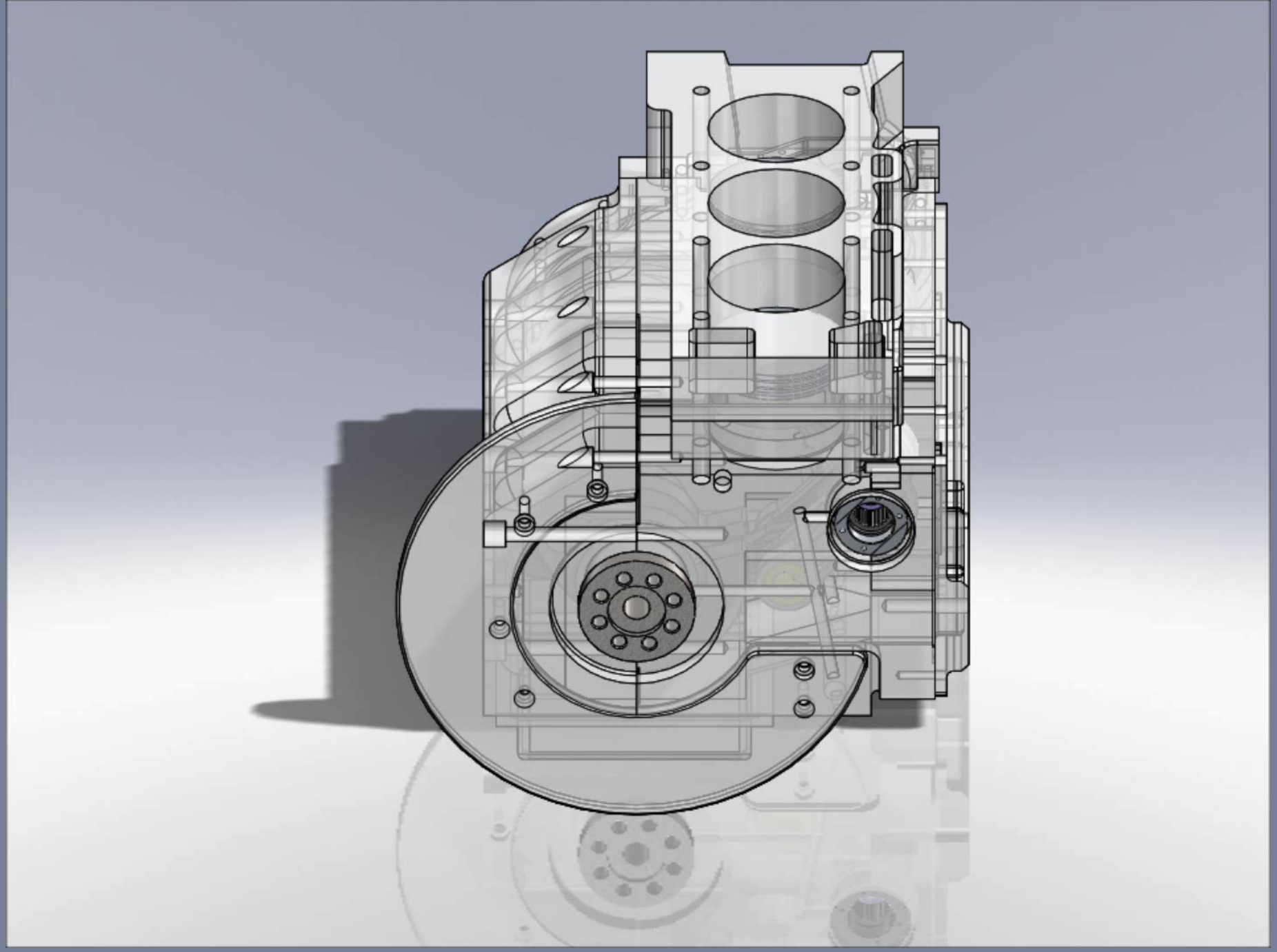

Scalzo Automotive Research Pty Ltd

Scalzo Automotive Research Pty Ltd

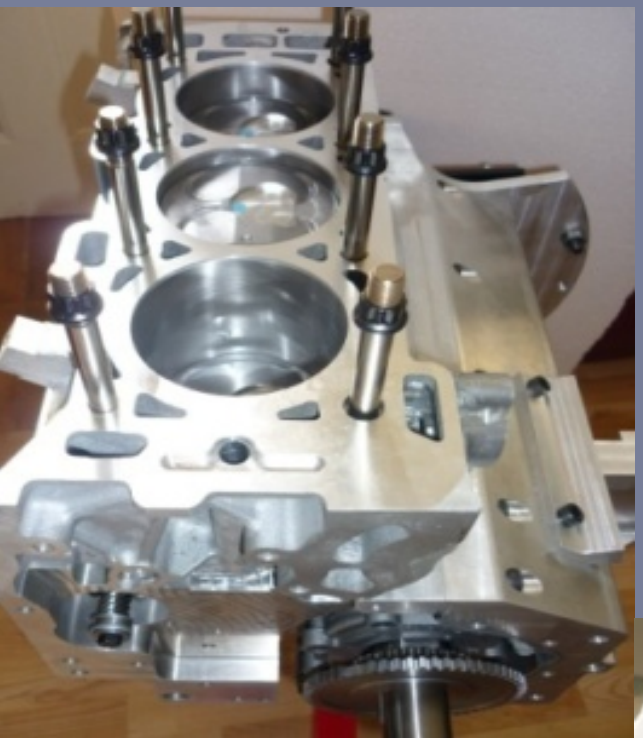

Scalzo Automotive Research Pty Ltd

Scalzo Automotive Research Pty Ltd

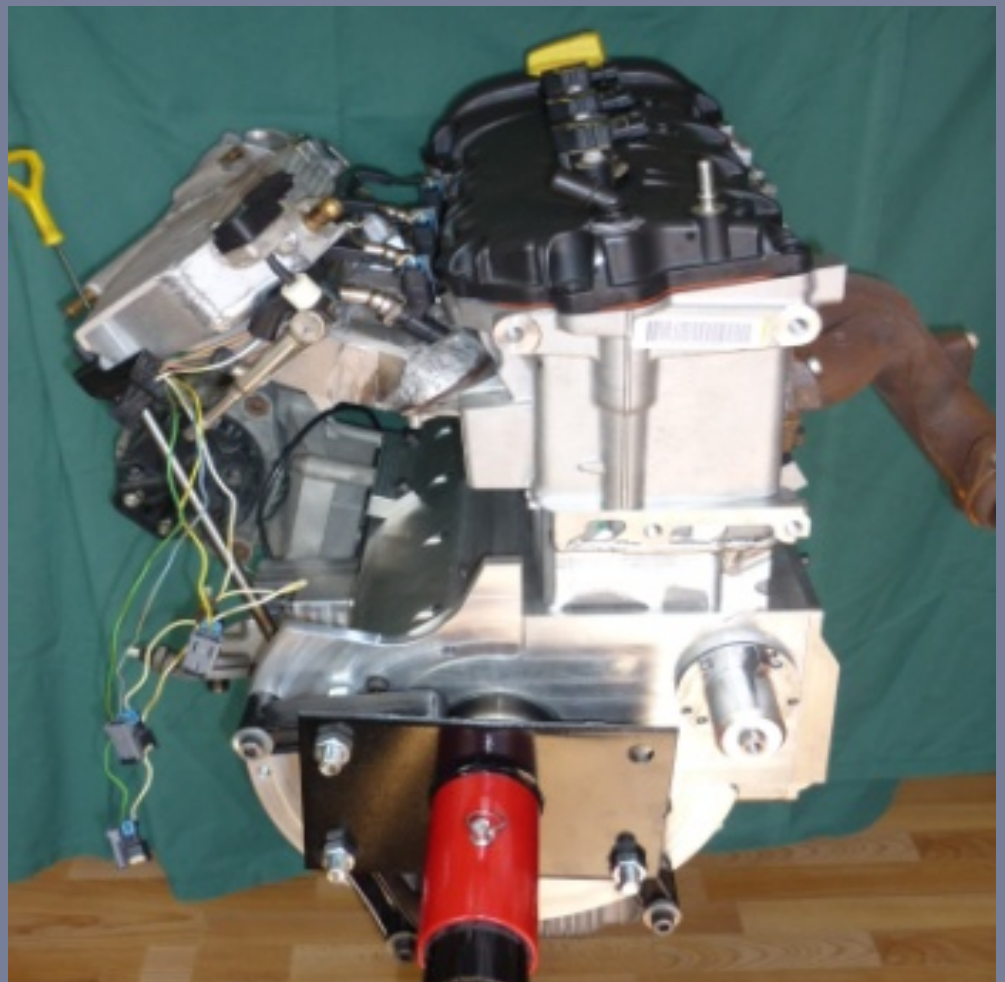

Scalzo Automotive Research Pty Ltd

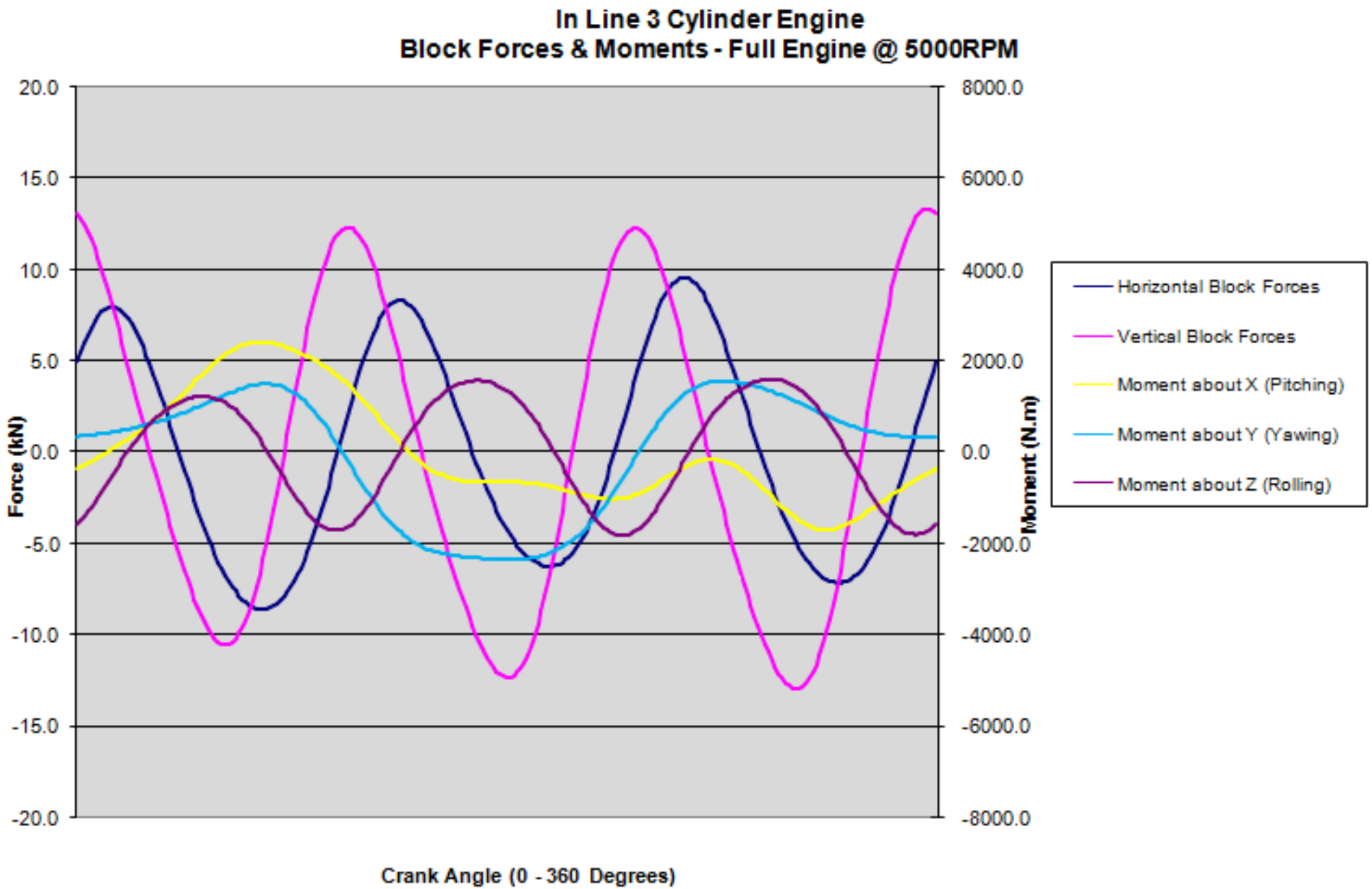
In Line 3 Cylinder Engine
Block Forces & Moments - Full Engine @ 5000RPM
20.0
15.0
10.0
5.0
0.0
-5.0
-10.0
-15.0
-20.0
Force (kN)
8000.0
6000.0
4000.0
2000.0
0.0
-2000.0
-4000.0
-6000.0
-8000.0
Moment (N.m)
Crank Angle (0 - 360 Degrees)
Horizontal Block Forces
Vertical Block Forces
Moment about X (Pitching)
Moment about Y (Yawing)
Moment about Z (Rolling)

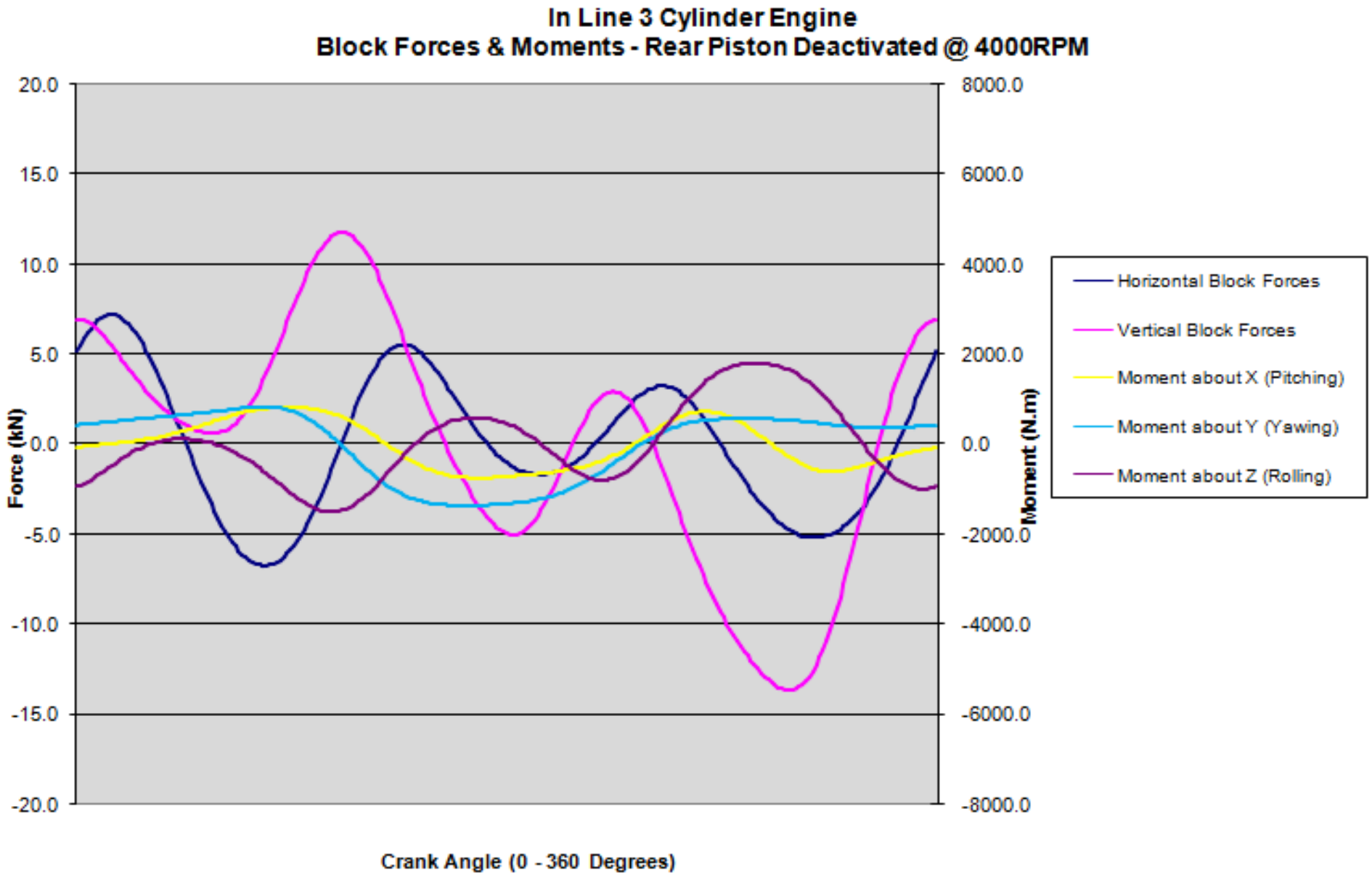
In Line 3 Cylinder Engine
Block Forces & Moments - Rear Piston Deactivated @ 4000RPM
20.0
15.0
10.0
5.0
0.0
-5.0
-10.0
-15.0
-20.0
Force (kN)
8000.0
6000.0
4000.0
2000.0
0.0
-2000.0
-4000.0
-6000.0
-8000.0
Moment (N.m)
Crank Angle (0 - 360 Degrees)
Horizontal Block Forces
Vertical Block Forces
Moment about X (Pitching)
Moment about Y (Yawing)
Moment about Z (Rolling)

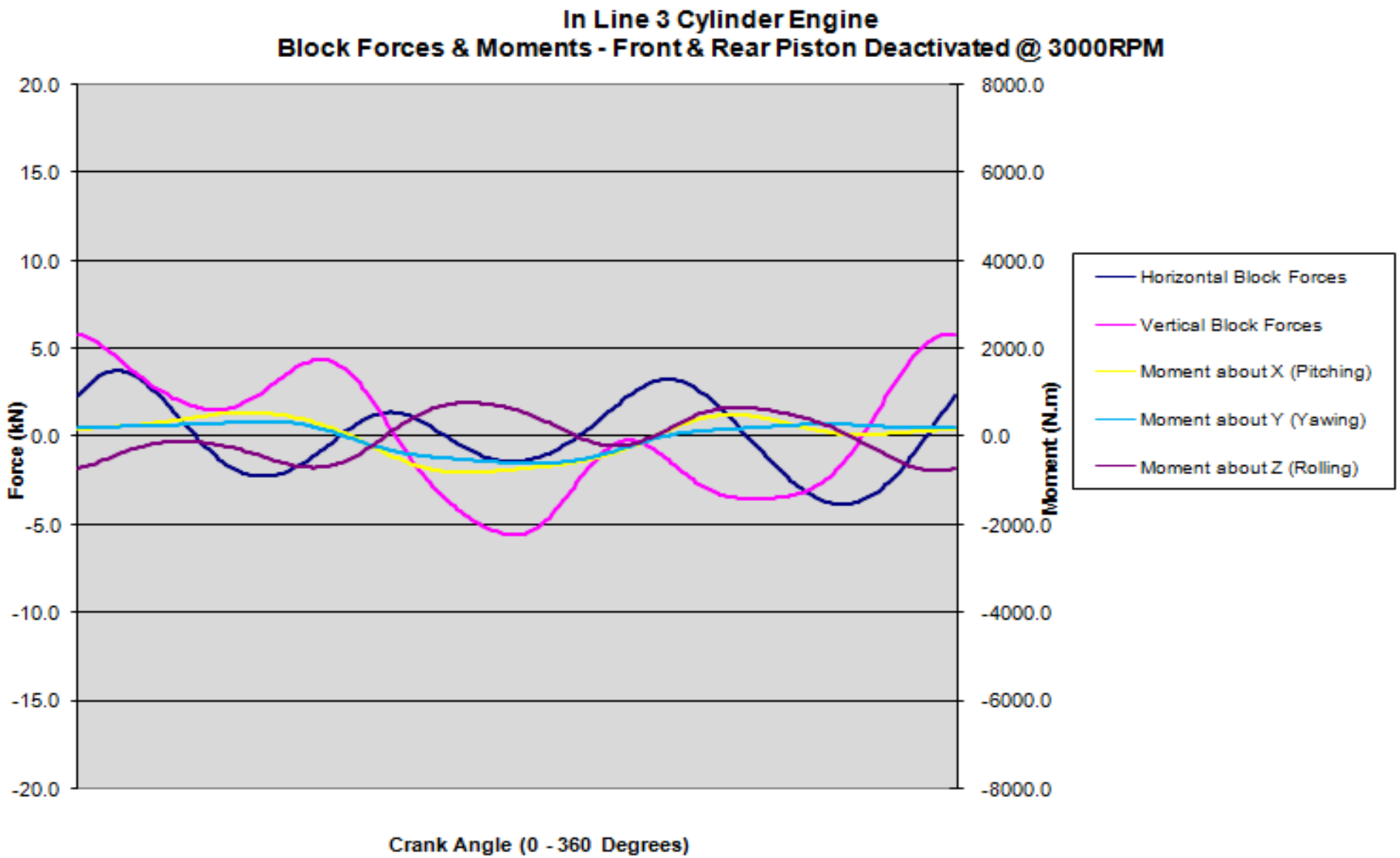
In Line 3 Cylinder Engine
Block Forces & Moments - Front & Rear Piston Deactivated @ 3000RPM
20.0
15.0
10.0
5.0
0.0
-5.0
-10.0
-15.0
-20.0
Force (kN)
8000.0
6000.0
4000.0
2000.0
0.0
-2000.0
-4000.0
-6000.0
-8000.0
Moment (N.m)
Horizontal Block Forces
Vertical Block Forces
Moment about X (Pitching)
Moment about Y (Yawing)
Moment about Z (Rolling)
Crank Angle (0 - 360 Degrees)

The Scalzo Piston Deactivation Engine

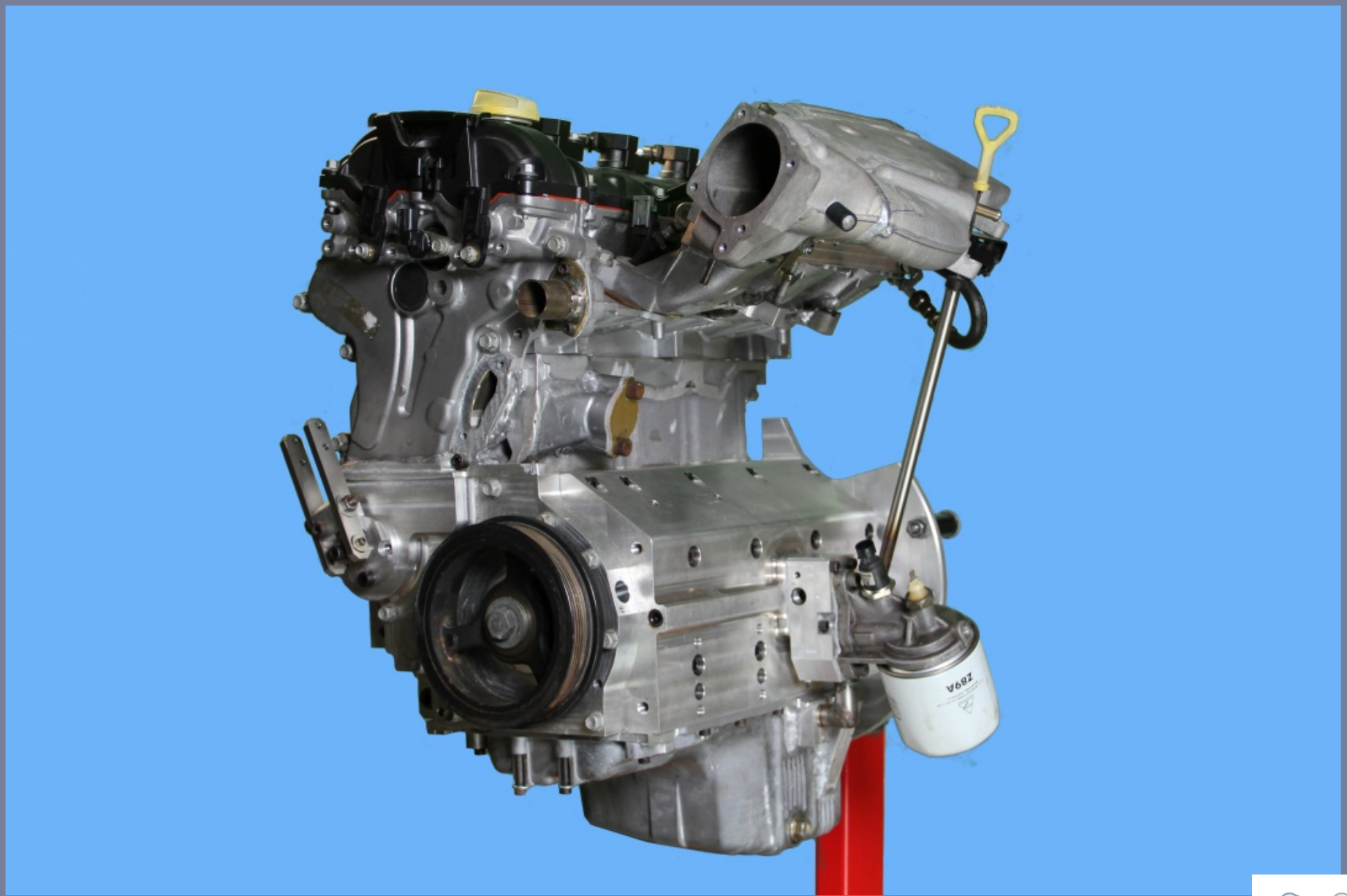

Scalzo Automotive Research Pty Ltd

V-6 WITH FRONT TWO PISTONS DEACTIVATED

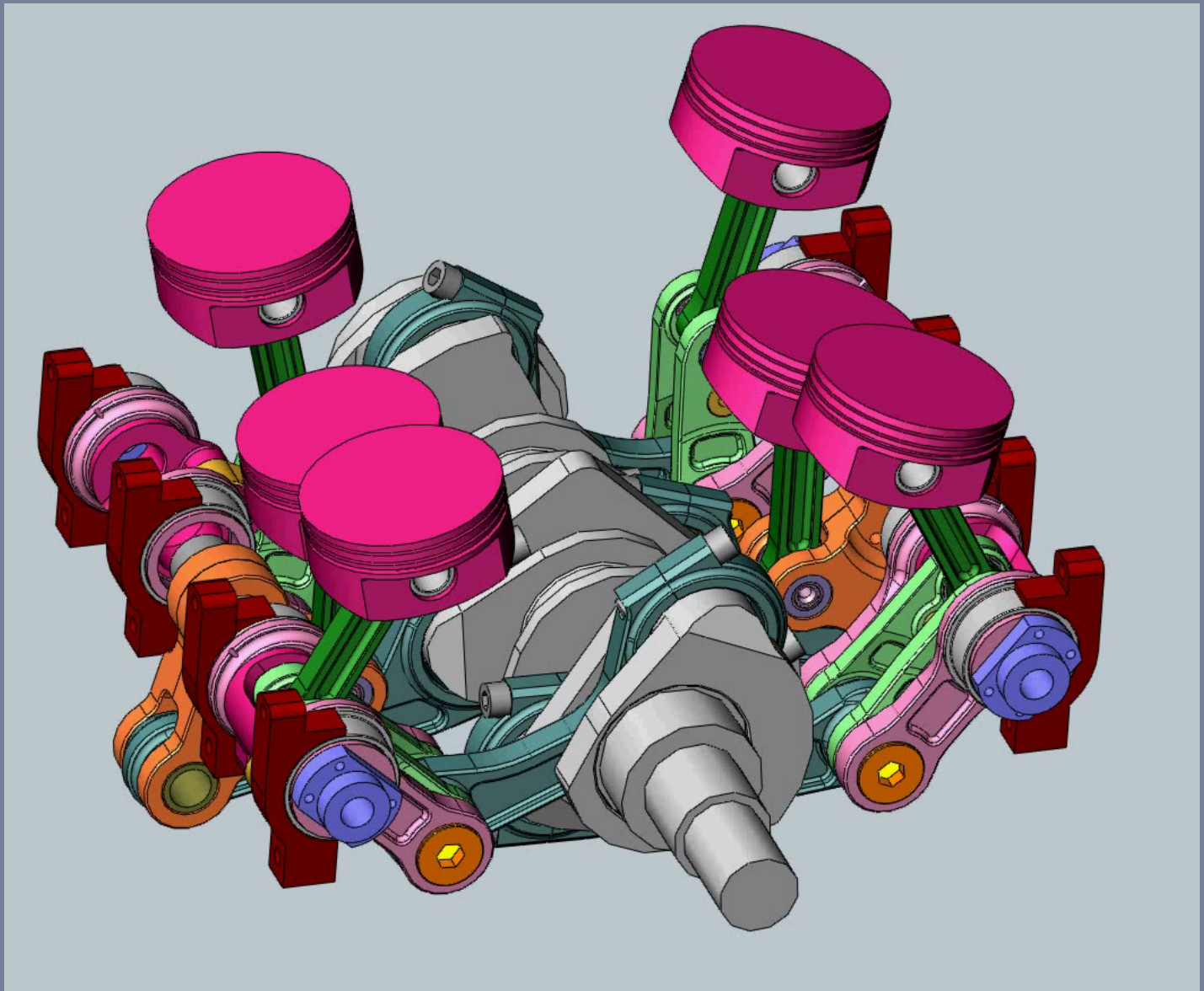

Scalzo Automotive Research Pty Ltd

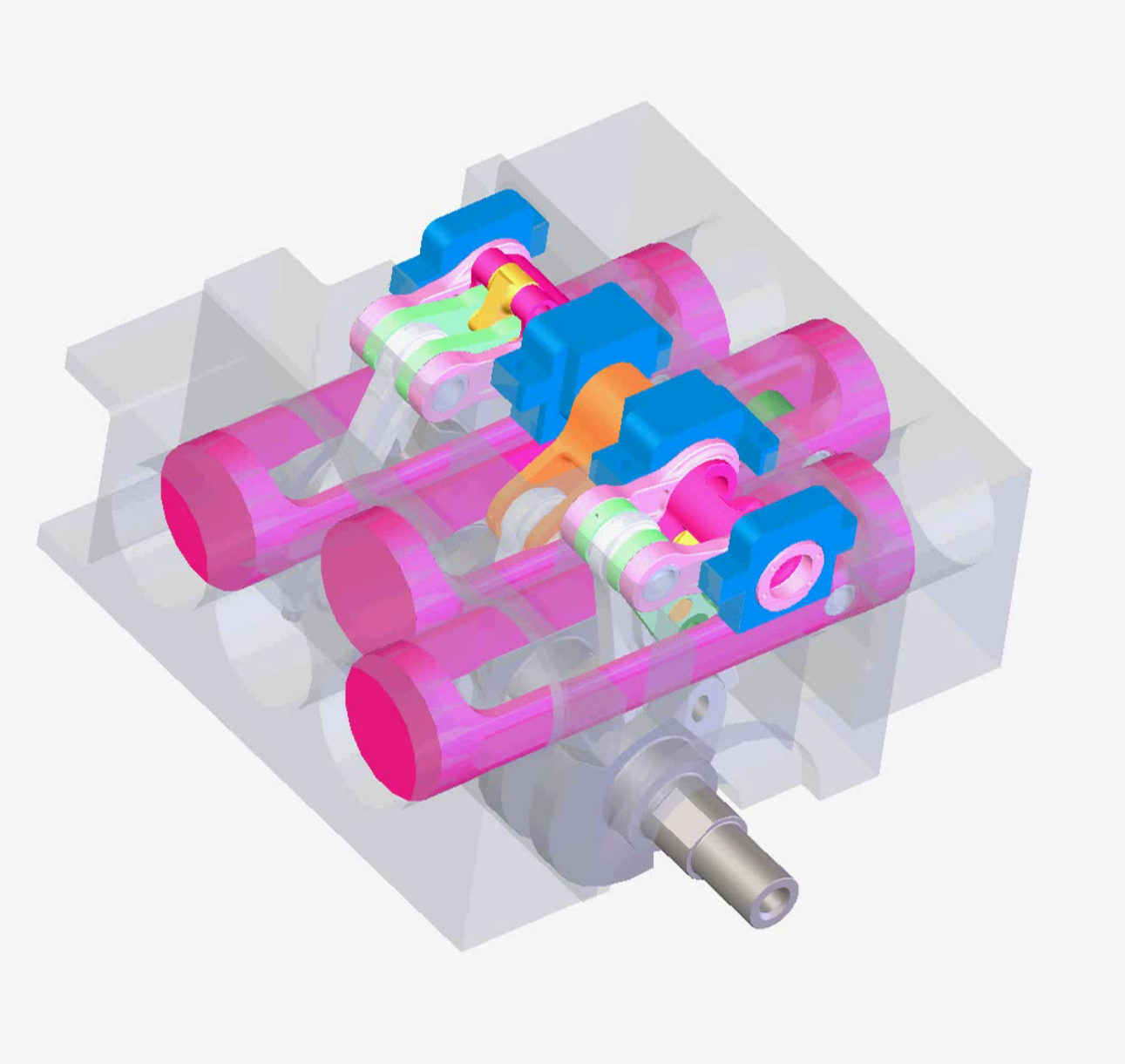

FLAT 6 CONCEPT (2 DEACTIVATION MECHANISMS)

Scalzo Automotive Research Pty Ltd

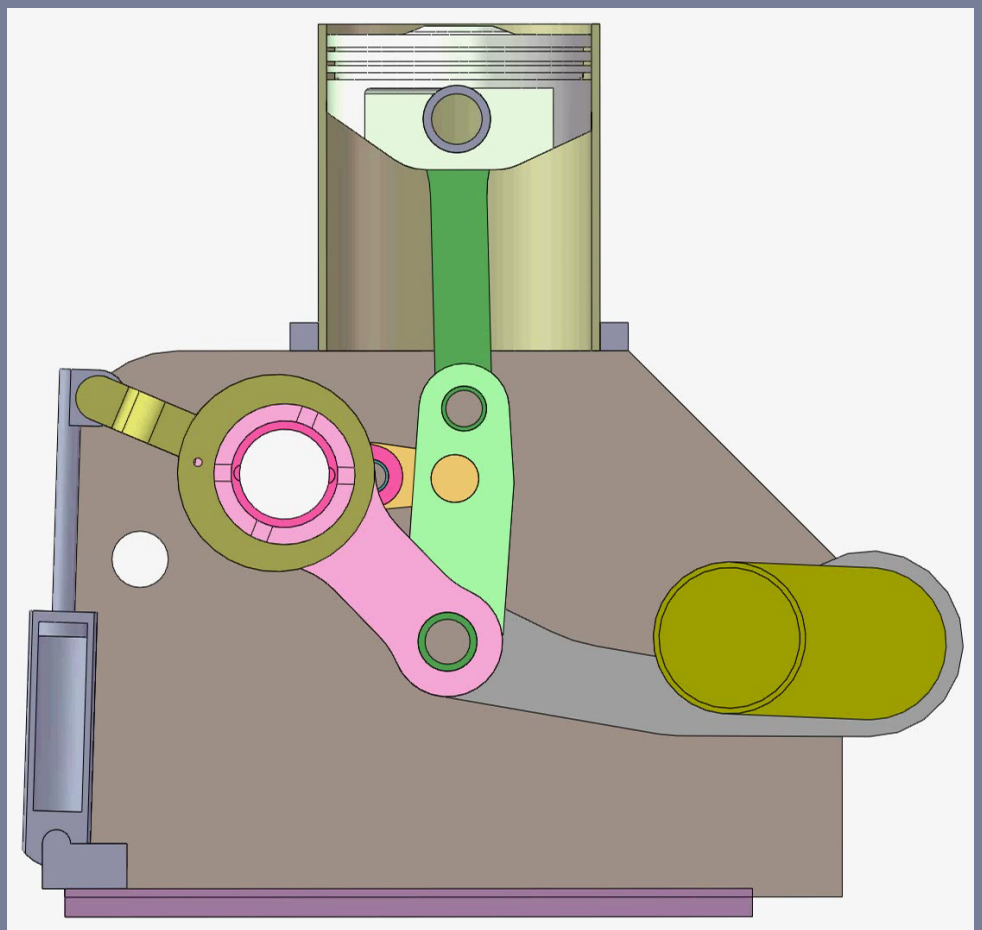

LINEAR ACTUATOR FOR VCR

ROTARY ACTUATOR FOR VCR

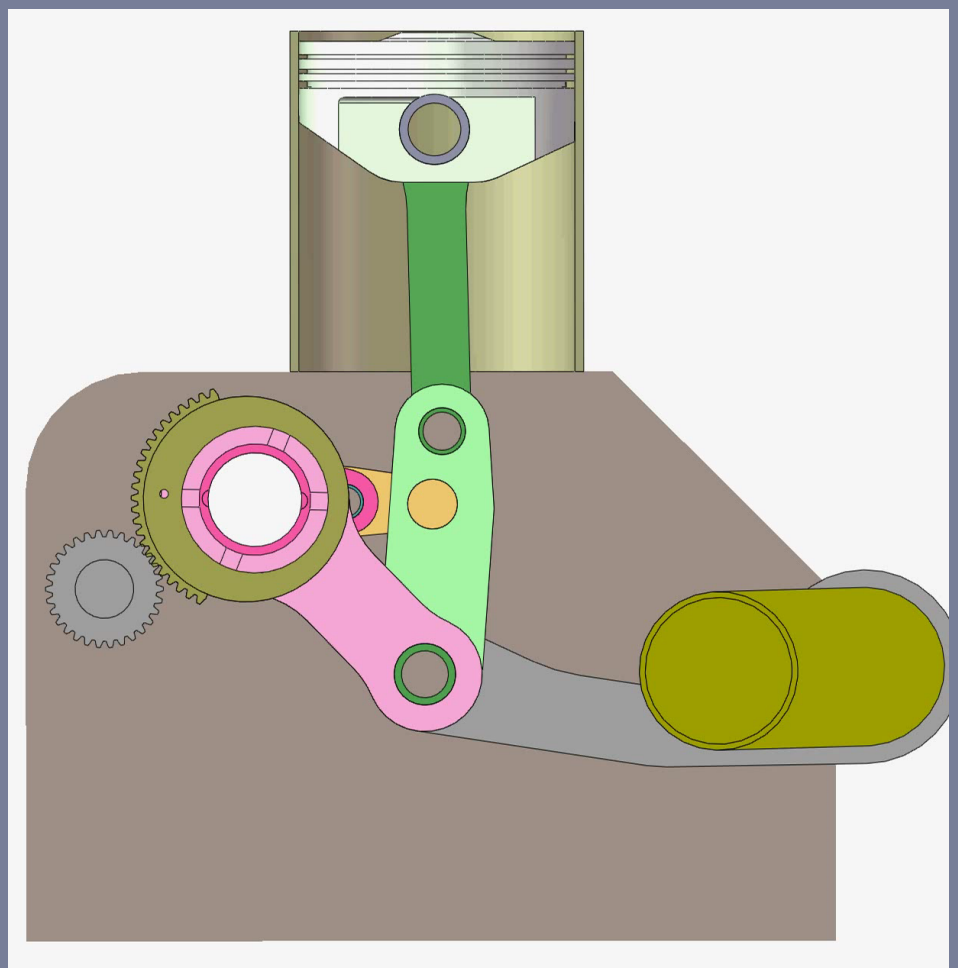

Scalzo Automotive Research Pty Ltd

Summary of PDE with VCR Advantages:

- Substantial reduction in fuel consumption estimated in excess of 30% with corresponding reduction in emissions.
- An estimated additional 5% to 10% fuel reduction with the inclusion of VCR.
- An estimated additional 10% to 15% fuel reduction with the inclusion of VCR and turbo charging.
- Applicable to Diesel engines and in particular to large diesel engines for road transport.
- Can be applied to V-type and horizontally opposed engines.
- Does not affect existing production of head, manifolds and fuelling systems.
- The small crankshaft to cylinder offset can be used to advantage for east-west installations.
- It uses conventional pin jointed and lubrication technology.
- Balancing requirements are within acceptable levels at all positions.
- Complementary to all other combustion technologies.
- Potential for reduced cooling system size. (Cost and weight reduction)
- Probable reduction in the size of starter motor and battery as the engine is started at minimum capacity. (Cost and weight reduction)
- Very low additional production cost relative to economy gains.
- Can be used in combination with a lower cost mini electric or flywheel hybrids.
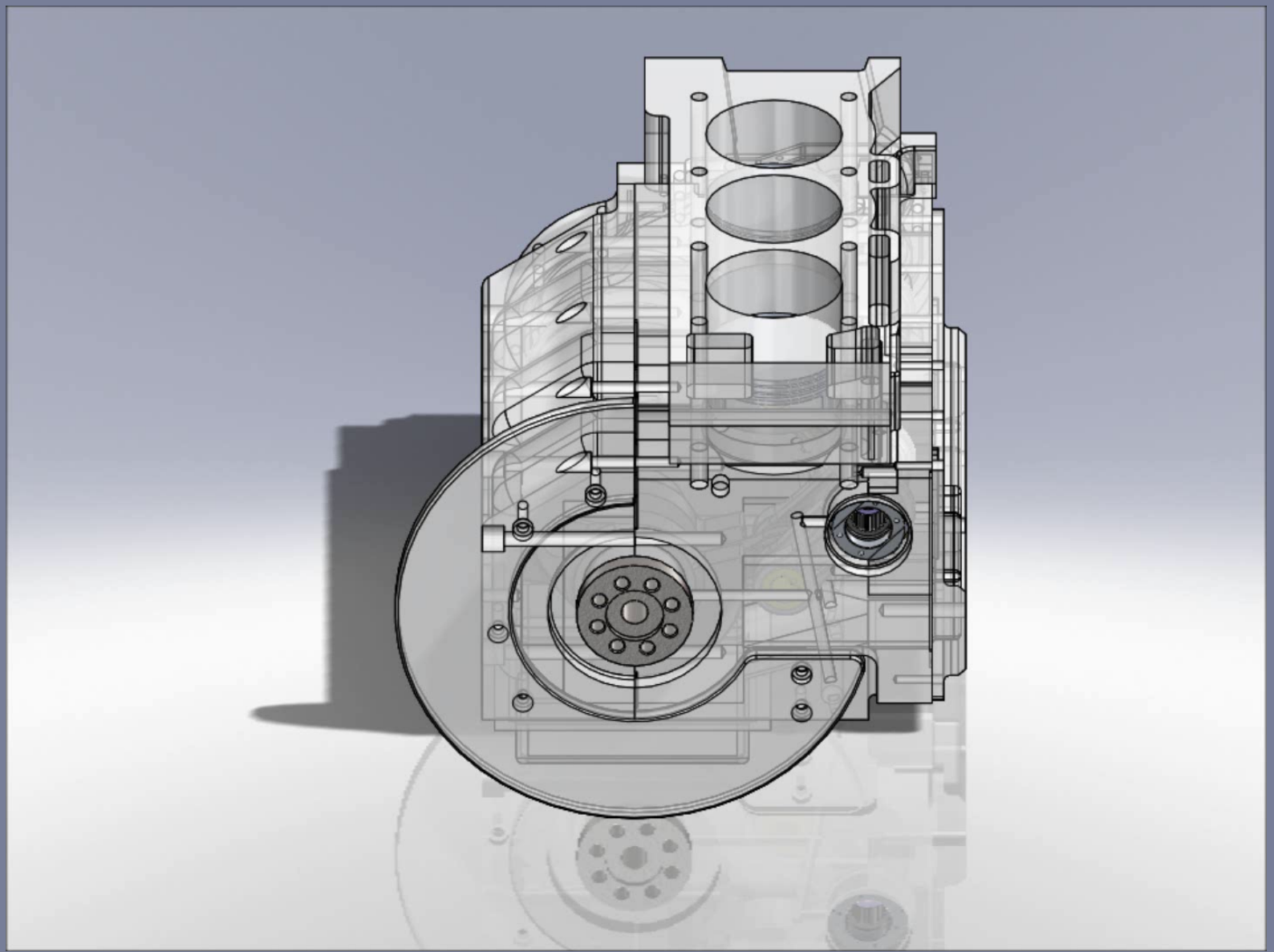
Questions