cruden

Running Simulink models natively in co-simulation with Cruden software

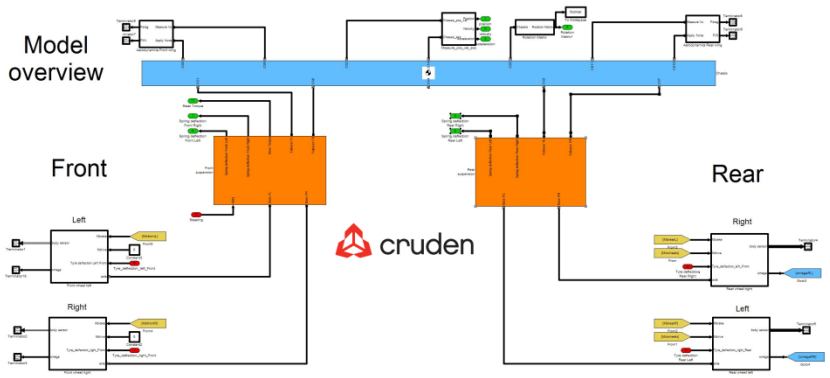

Maarten van Donselaar

June 13th 2012

Agenda

- Introduction to Cruden
- Physics engines
- Vehicle models

cruden

The Hexatech simulator family

- All electric
- Direct drive force feedback
- Used by:
  - Manufacturers
  - Motorsport teams
  - Suppliers
  - Research institutes
  - Universities

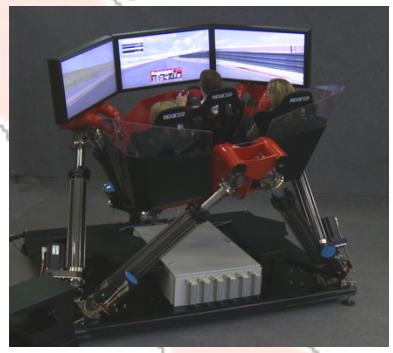

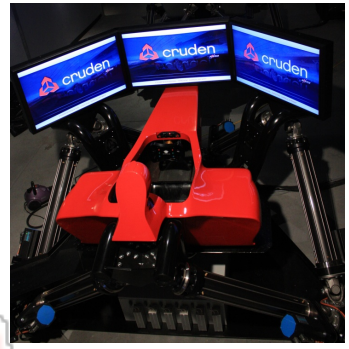

Cruden

- Background in professional flight simulation
- Dedicated to vehicle simulation since 2002
- With 28 people, all disciplines in house:
  - Hardware
  - Rendering
  - Content
  - Vehicle dynamics
  - Motion cueing

cruden

Over 85 motion based simulators sold worldwide

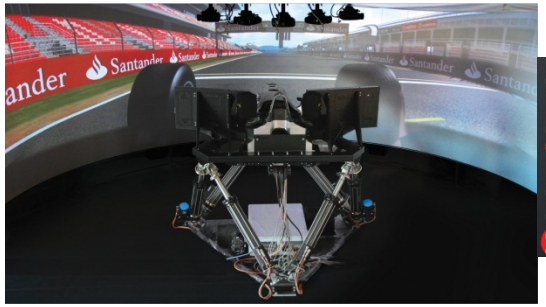

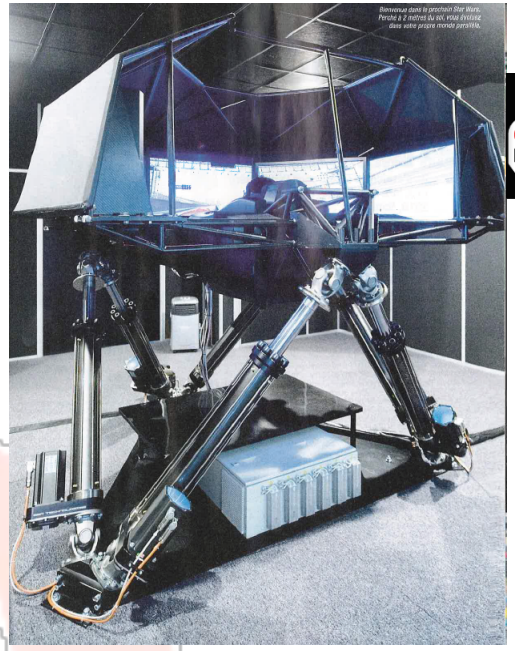

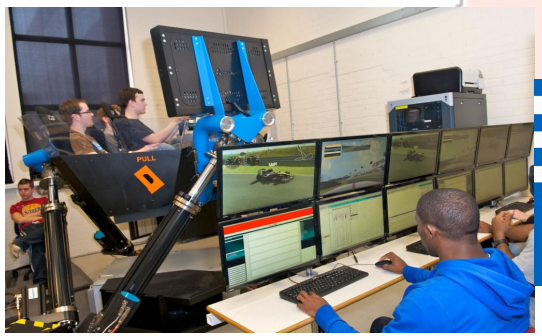

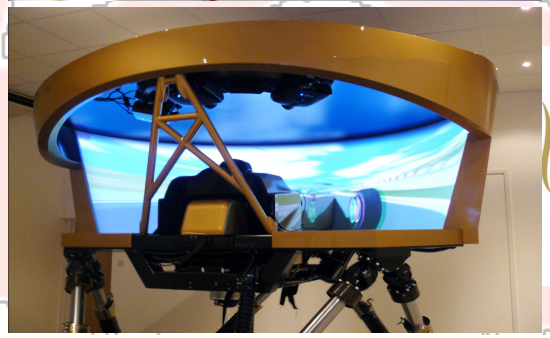

cruden

Vehicle dynamics solutions:

Physics Engines

- Built-in physics engine
  - Hard coded C++
  - Async from framerate

- External physics engine
  - Tie in custom code
  - Simulink RTW target
    - Windows dll for soft RT
    - Support for RTOS
  - Native Simulink co-simulation

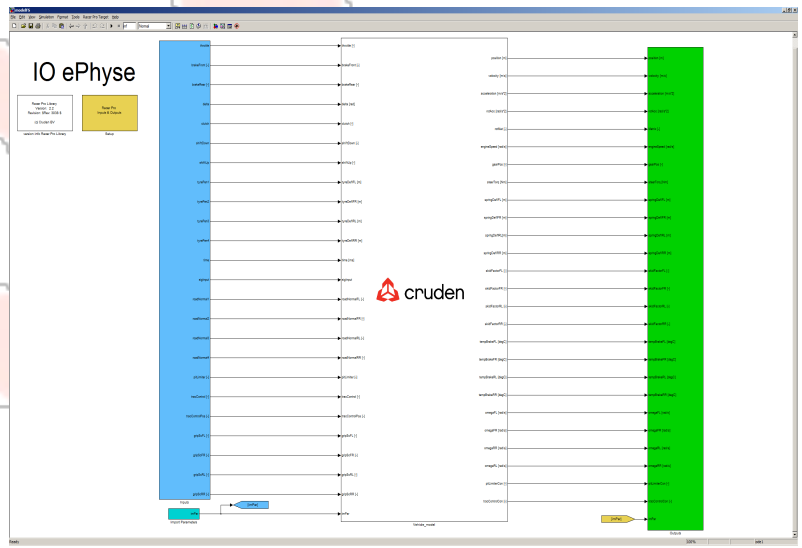

cruden

Vehicle dynamics solutions:

Vehicle Models

- Built-in model:
  - Rigid chassis
  - Kinematic suspension
  - 15 DOF
  - Fully parameterized
  - Pacejka 5.2
  - Nonlinear springs and dampers
  - Electric powersteering

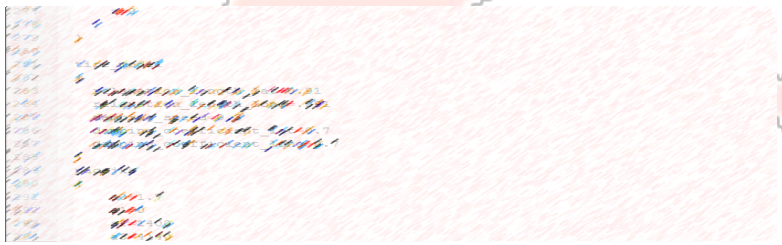

- Cruden vehicle model
  - Simulink/Simmechanics
  - “∞ ” DOF
  - Pacejka 6.1 with ΔP & ΔT
  - Open architecture

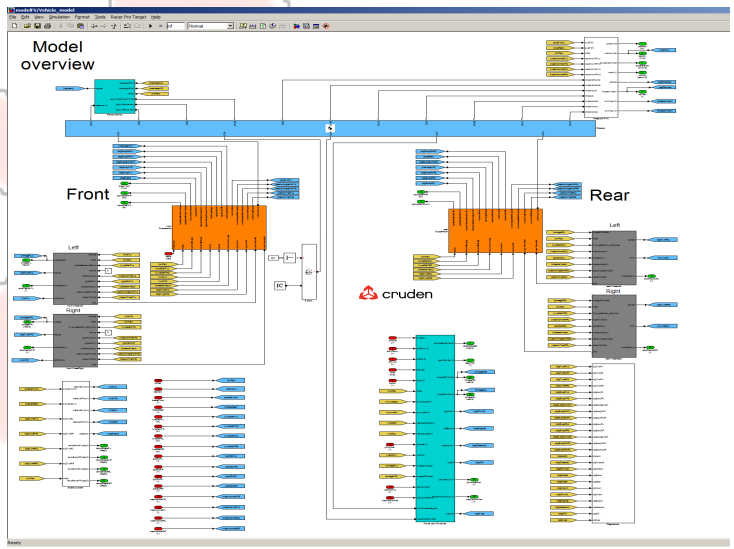

Native Simulink co-simulation

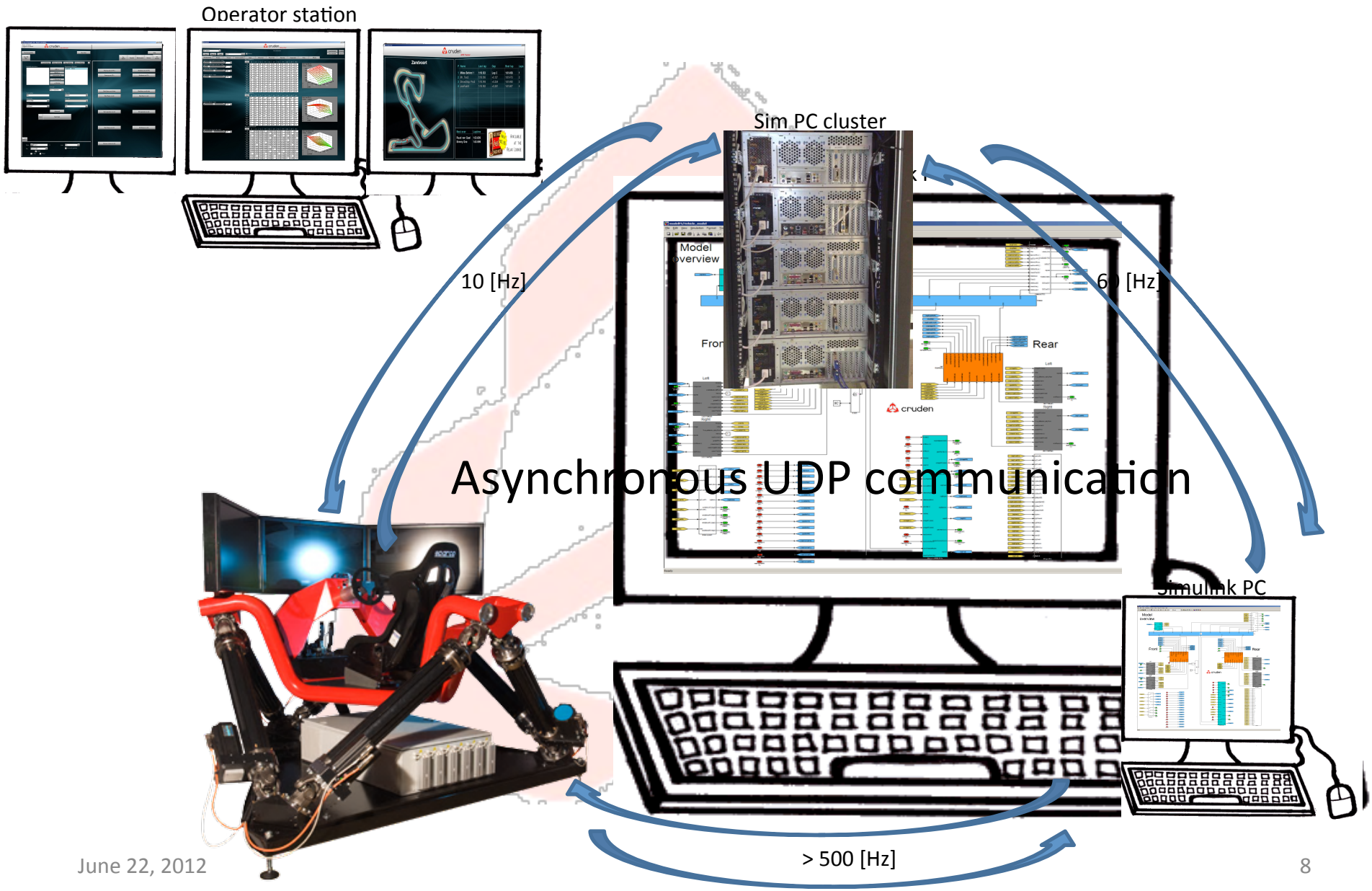

ePhyse Net

- MATLAB for Windows 7
- Soft real time by CPU throttling S-function
- Configuration/start/stop/reset from operator station

No need to compile your models

- All (runtime) Simulink features functional:
  - Change parameters on the fly
  - Trace signals using scope blocks
  - Very flexible data logging and processing
- No need for RTW: Saves time and money
- Use exact same models as on your desktop simulation
- 3rd party libraries and S-functions can be easily used

Vehicle modeling

- In-house detailed VD model
  - Simmechanics
  - Simdriveline
  - Simulink – In combination with C++ S functions

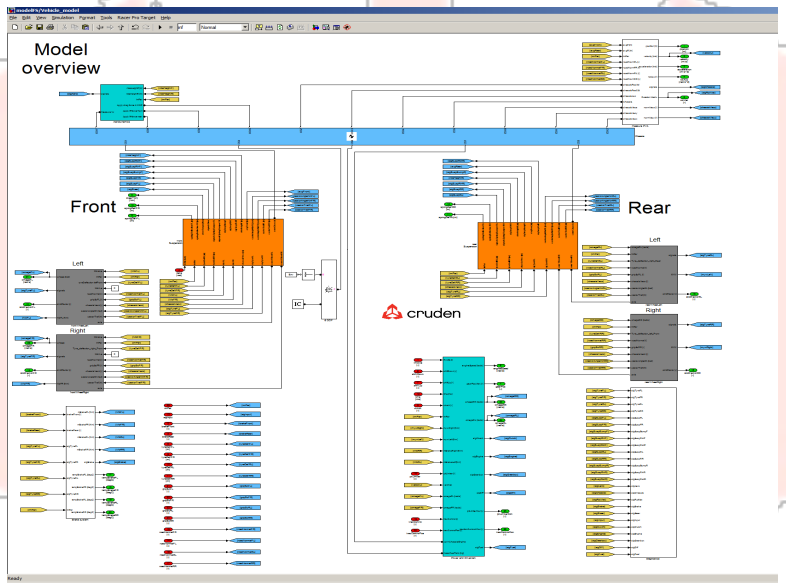

ePhyse – Power & Drive Train

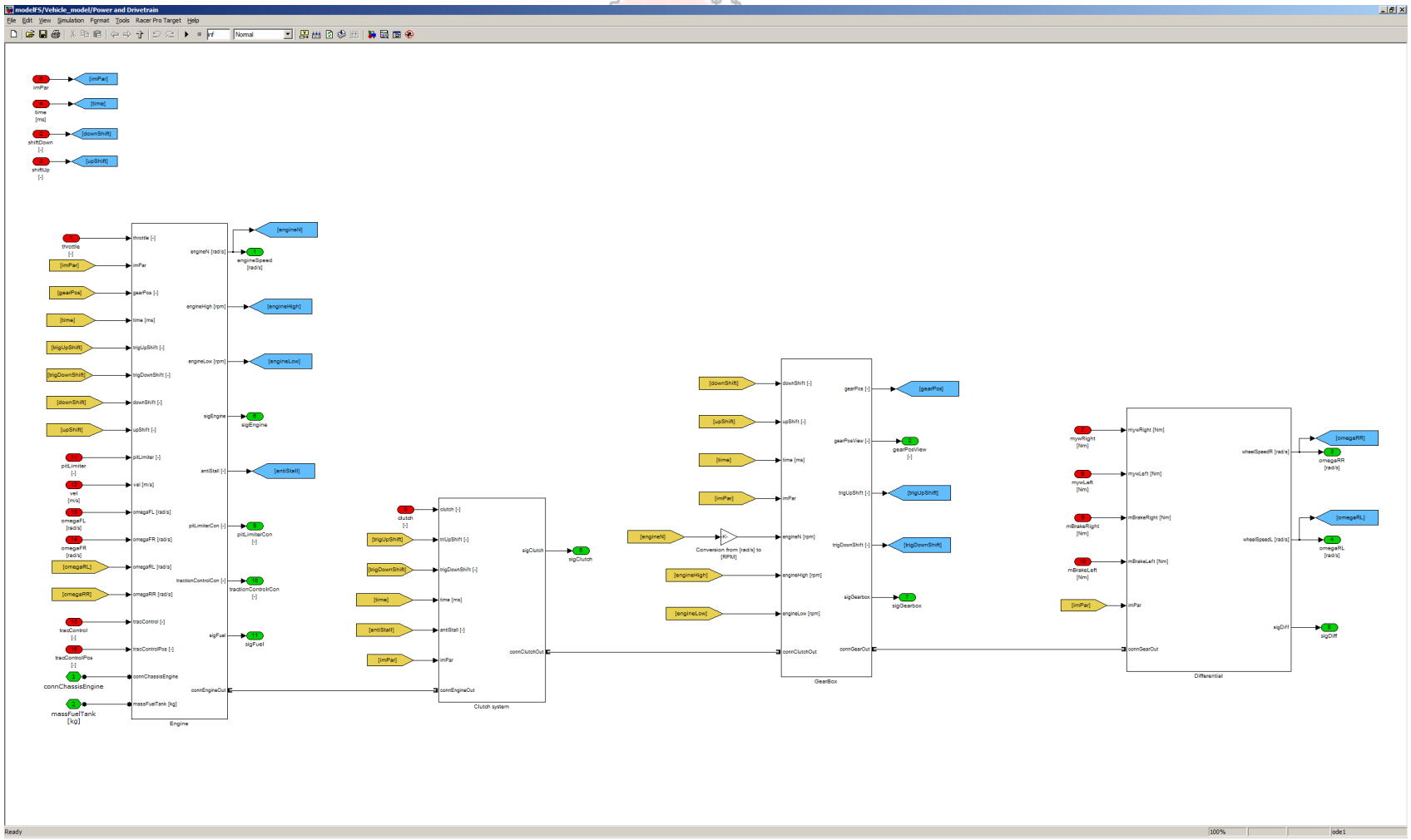

cruden

ePhyse – Power & Drive Train / Engine

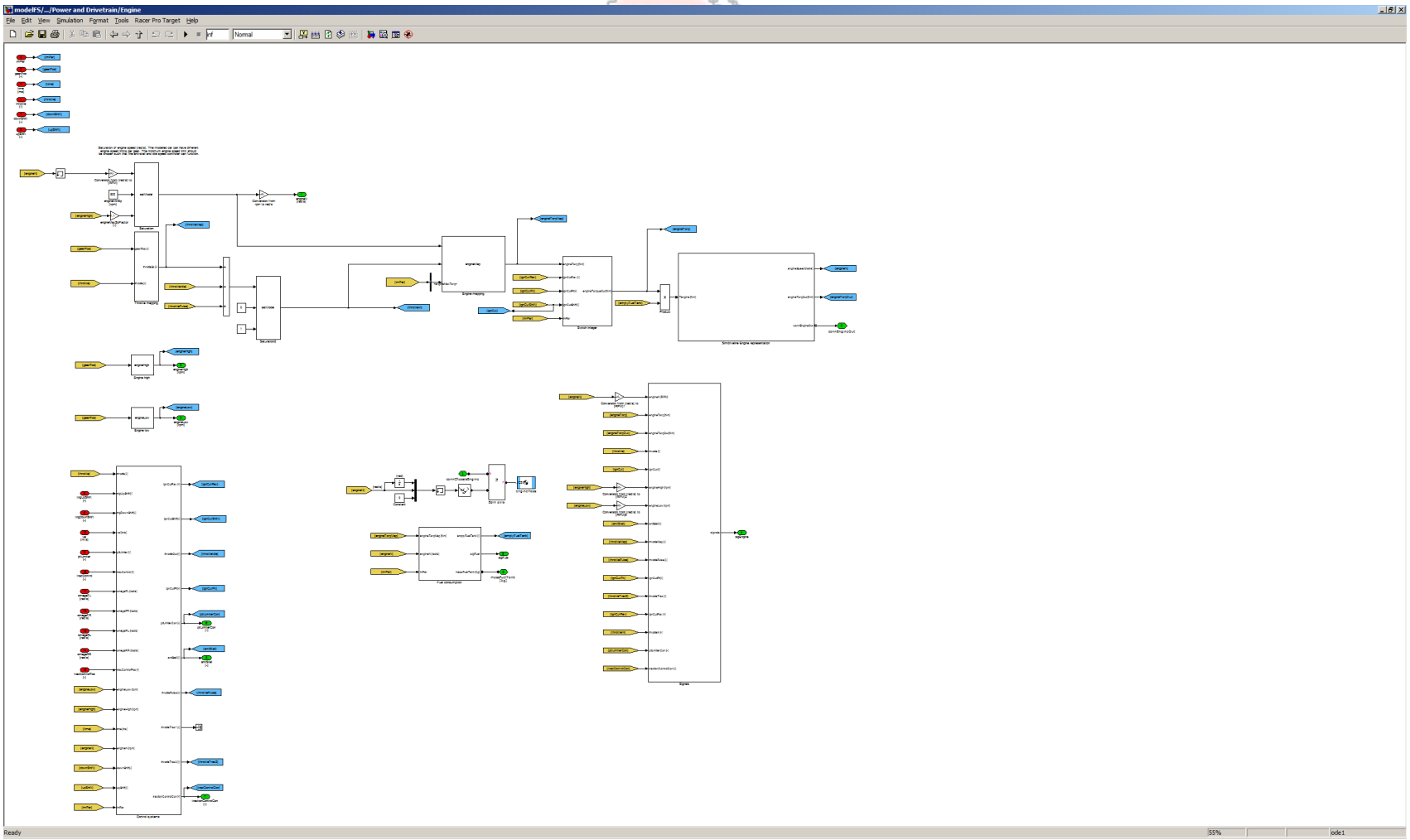

cruden

ePhyse – Power & Drive Train / Engine / Control Systems

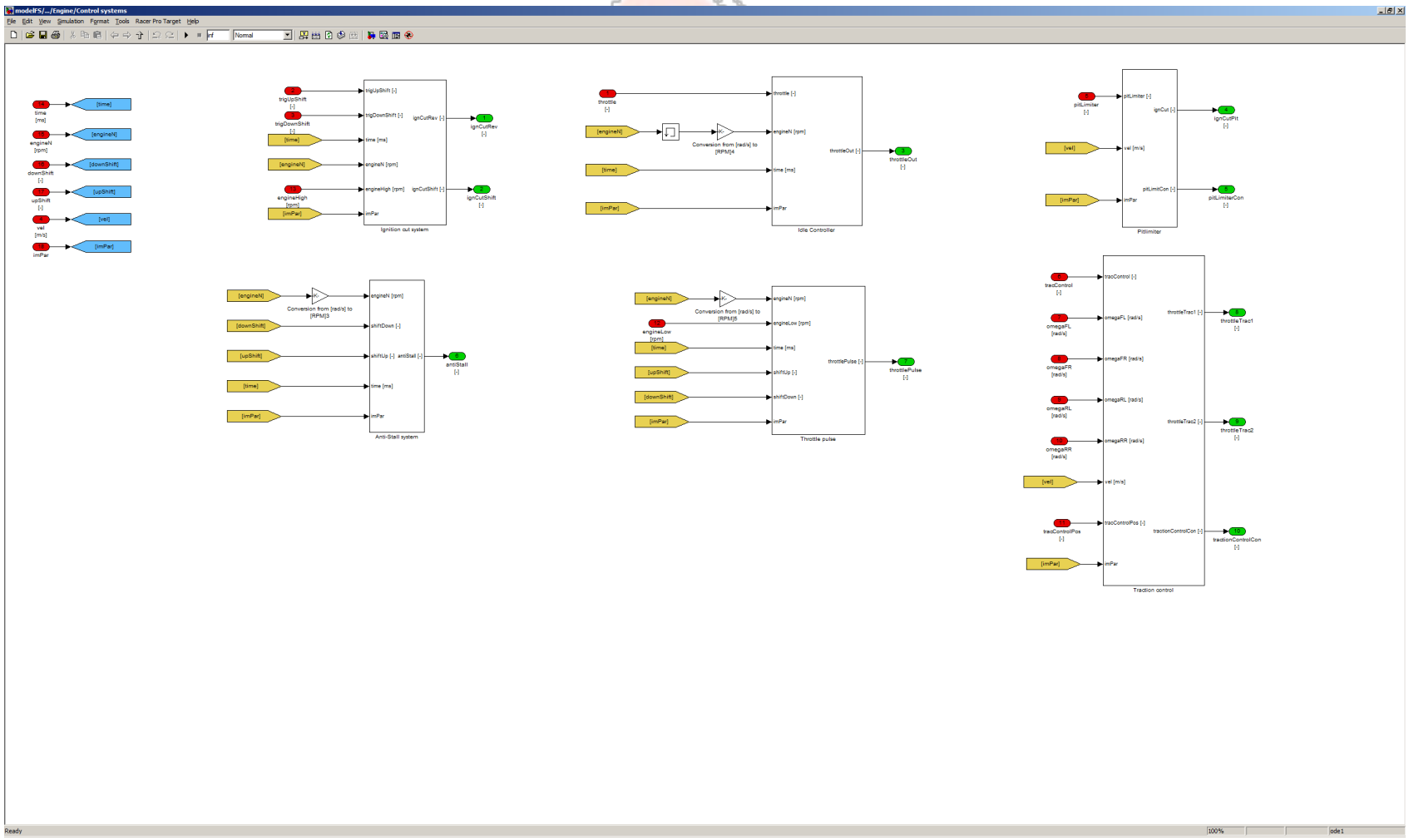

ePhyse – Power & Drive Train / Clutch

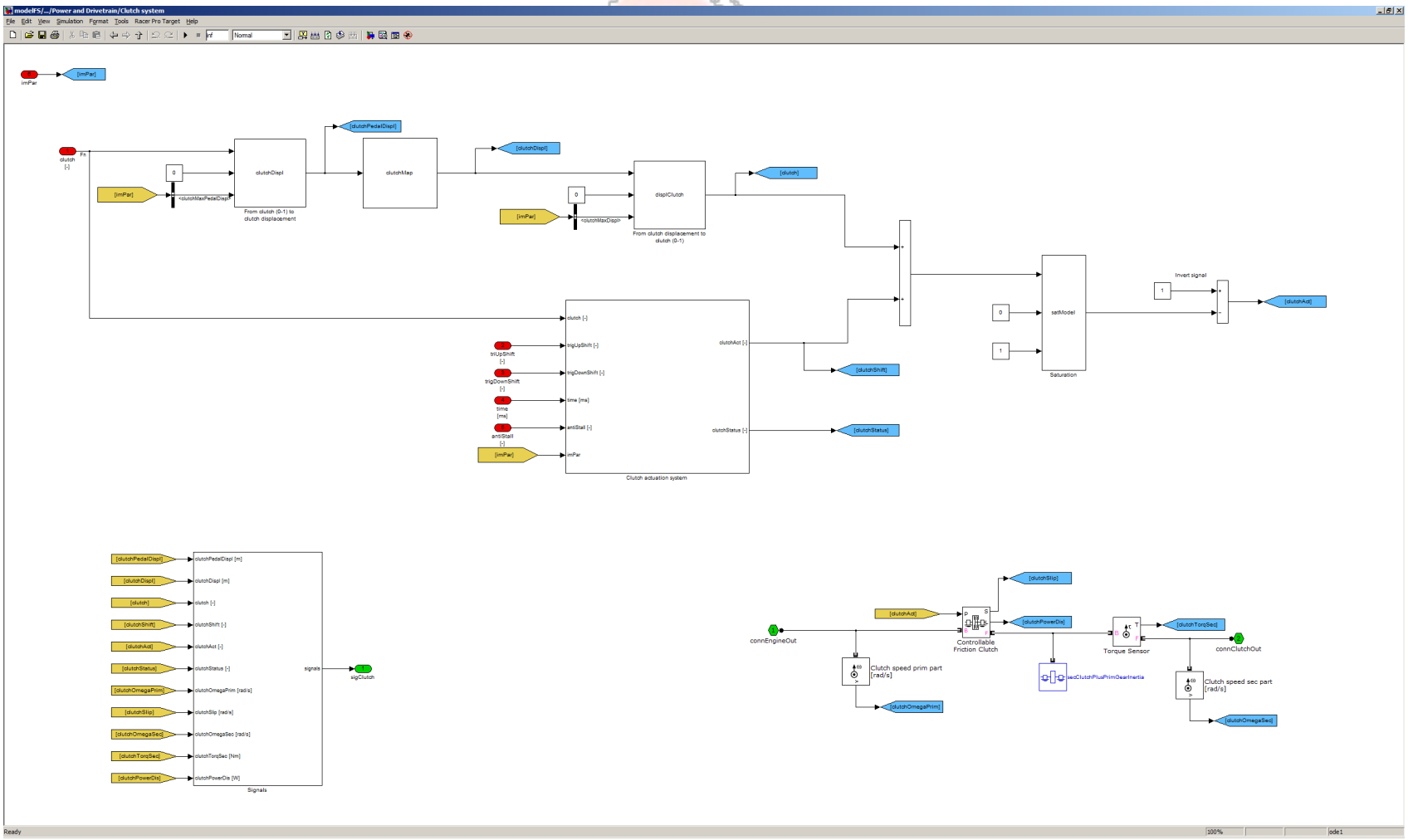

ePhyse – Power & Drive Train / Gearbox

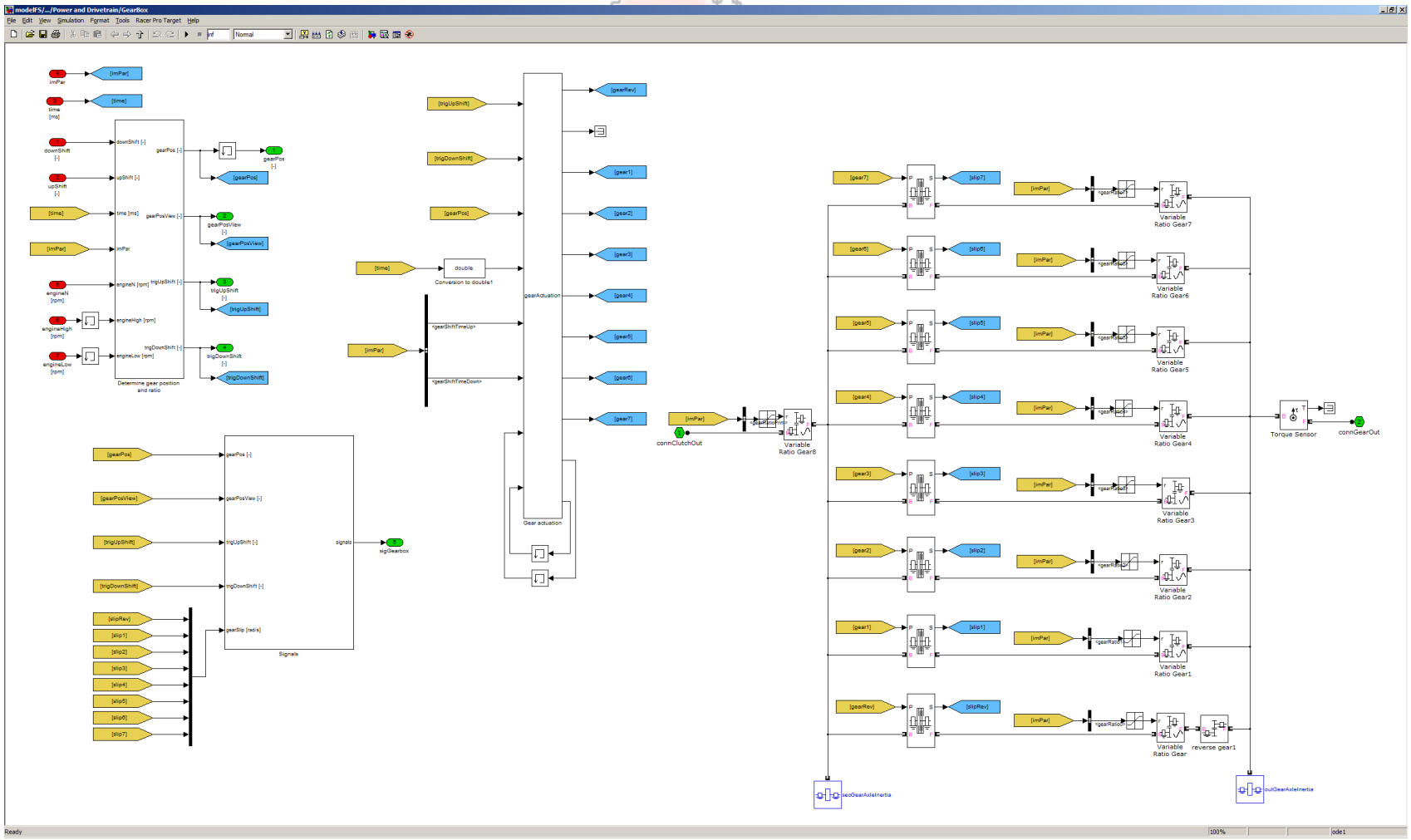

ePhyse – Power & Drive Train / Differential

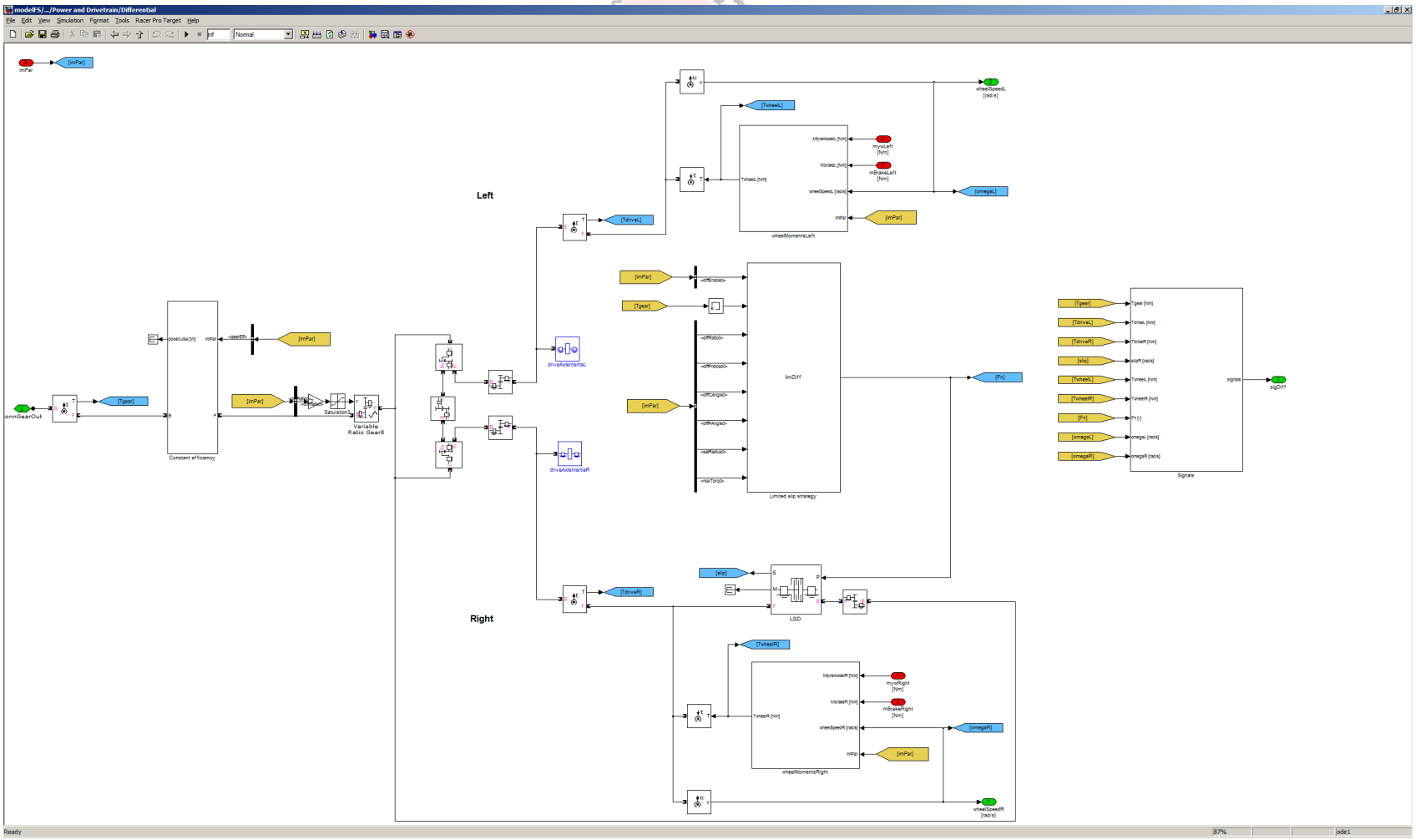

cruden

ePhyse – Front Suspension

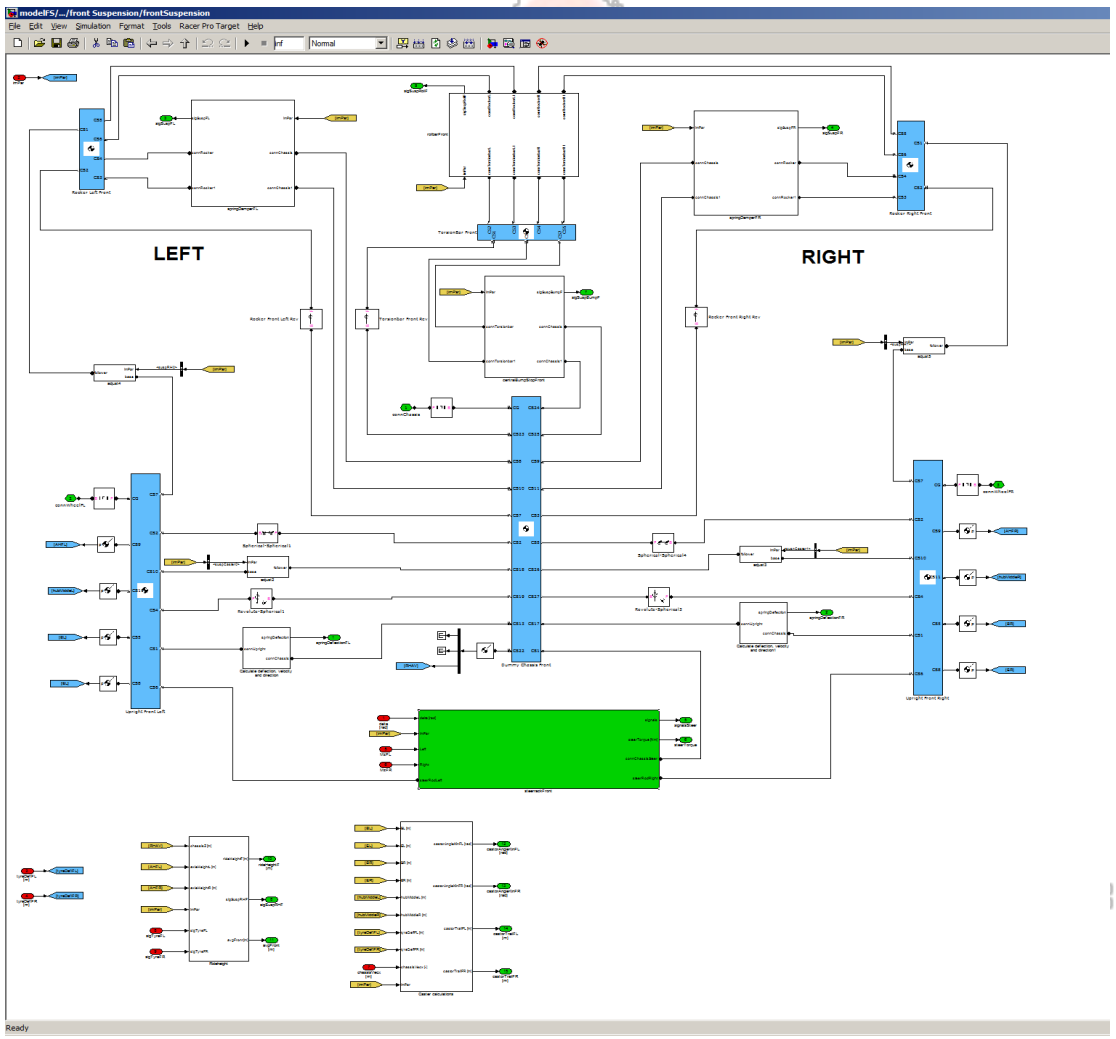

ePhyse – Front Wheel

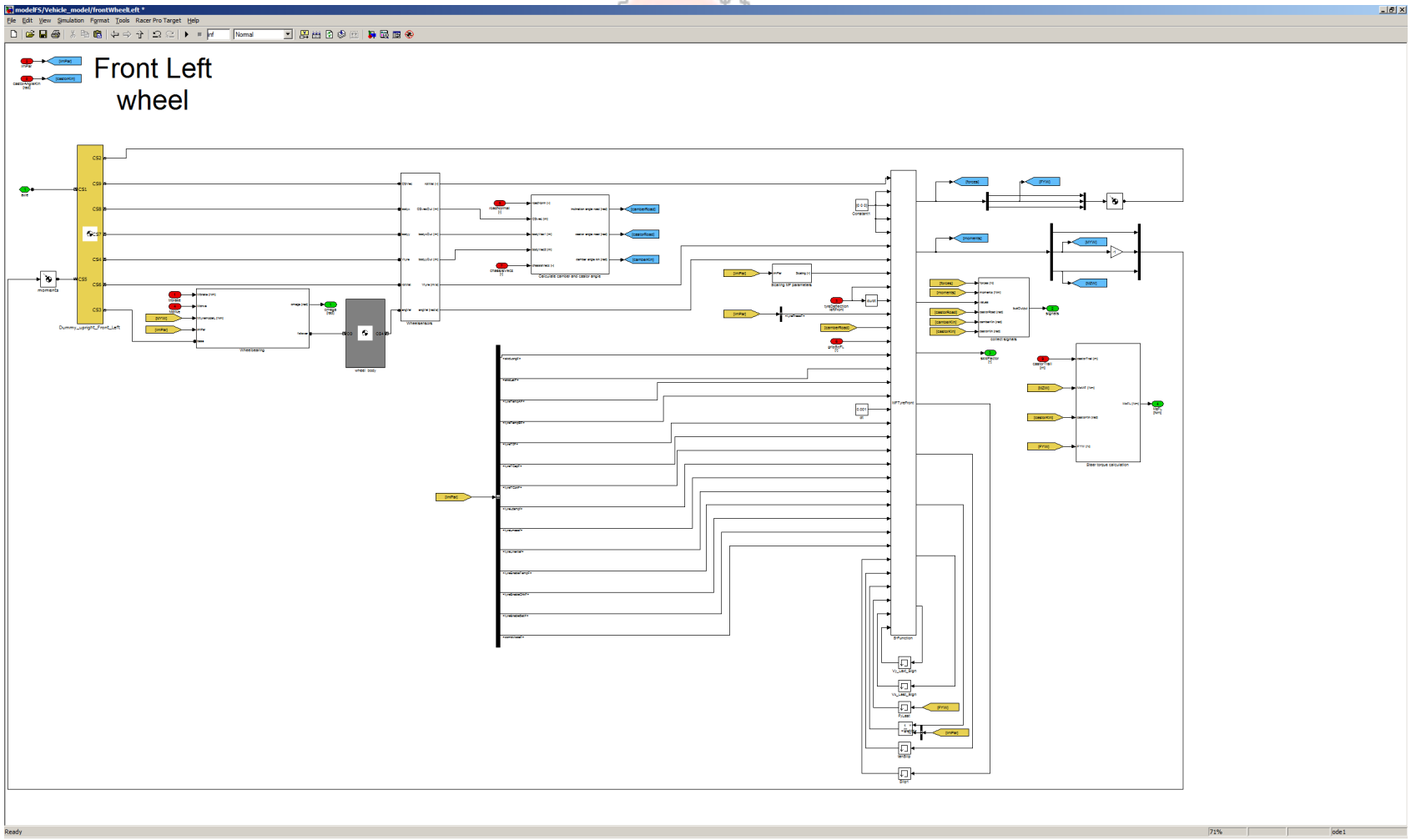

ePhyse – Front Wheel / Wheel Bearing

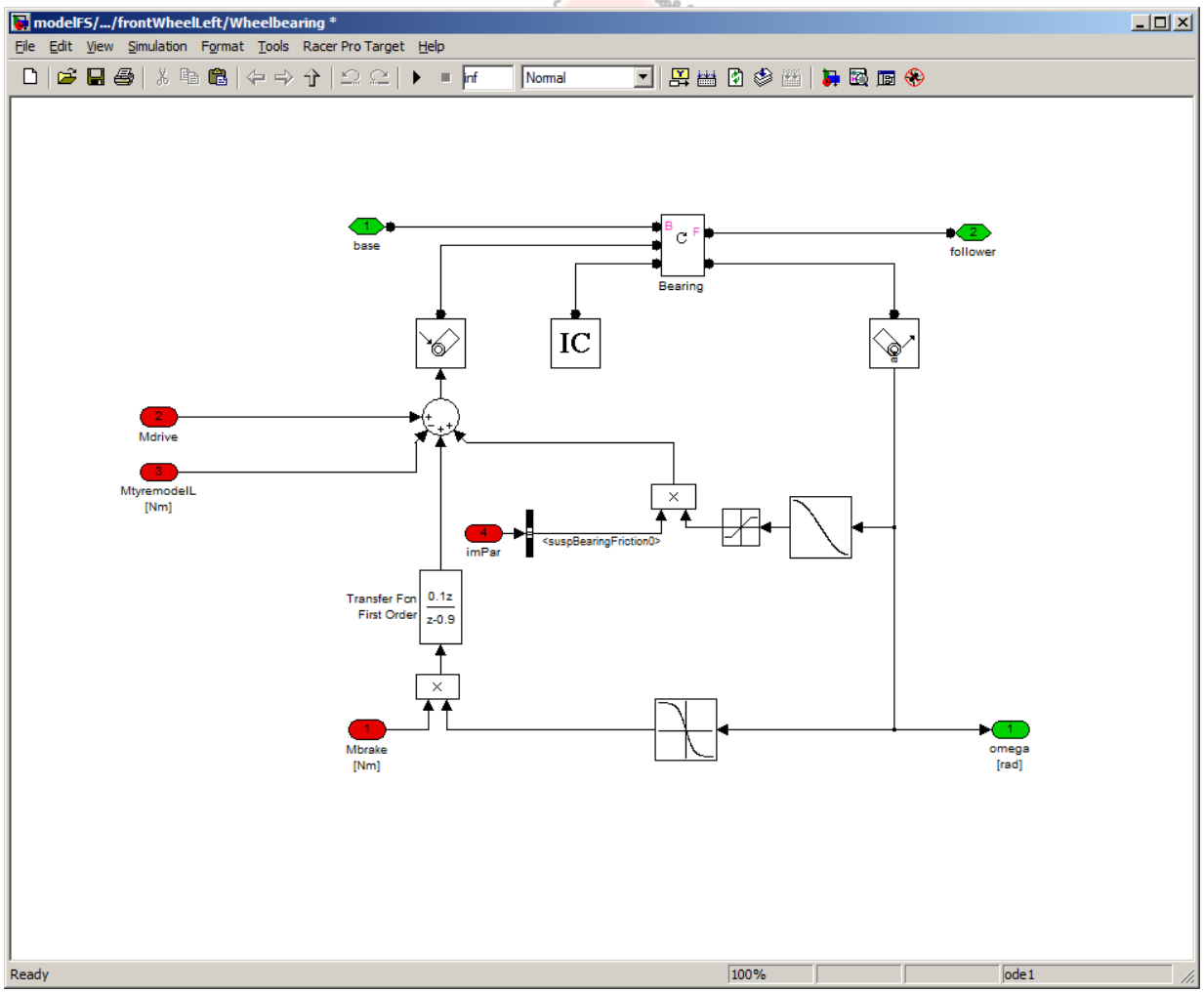

cruden

ePhyse – Rear Suspension

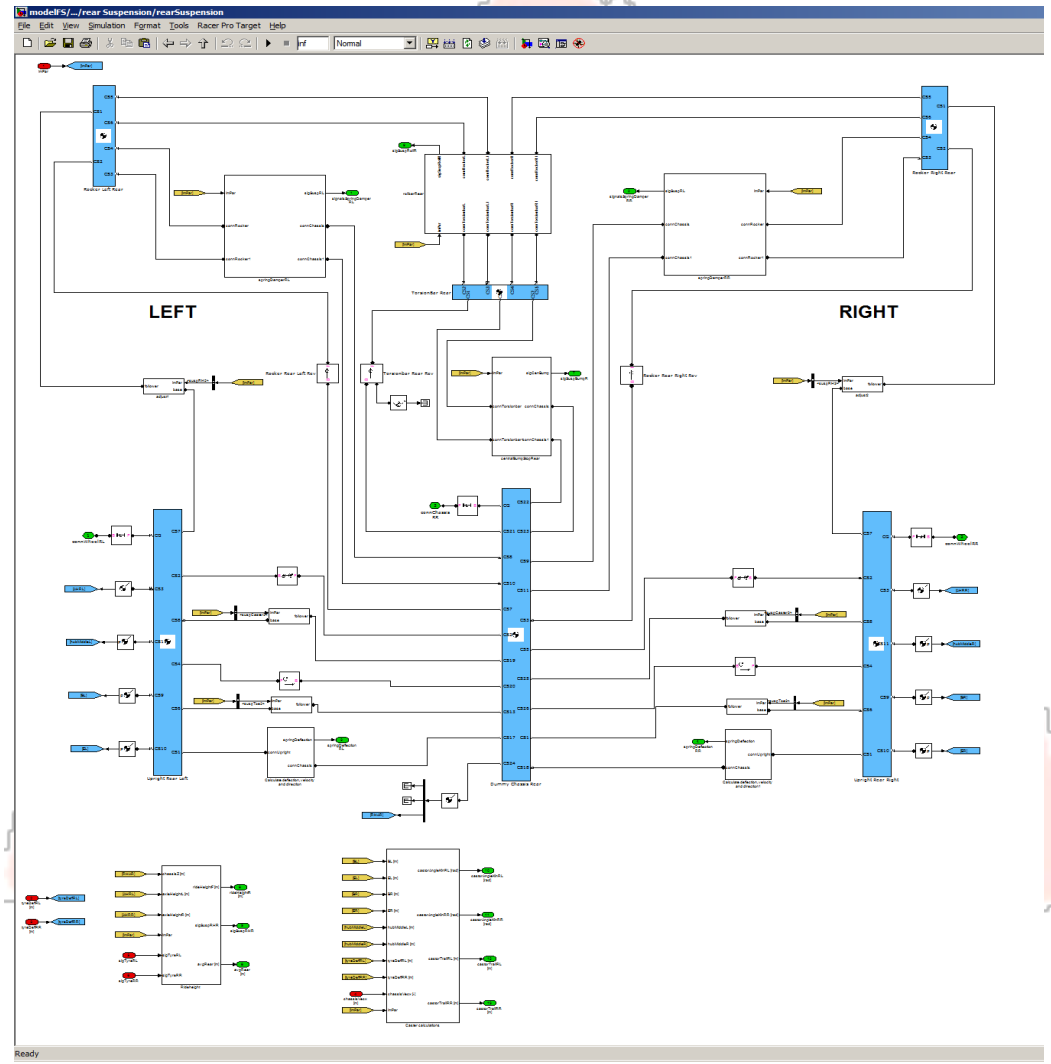

ePhyse – Brakes

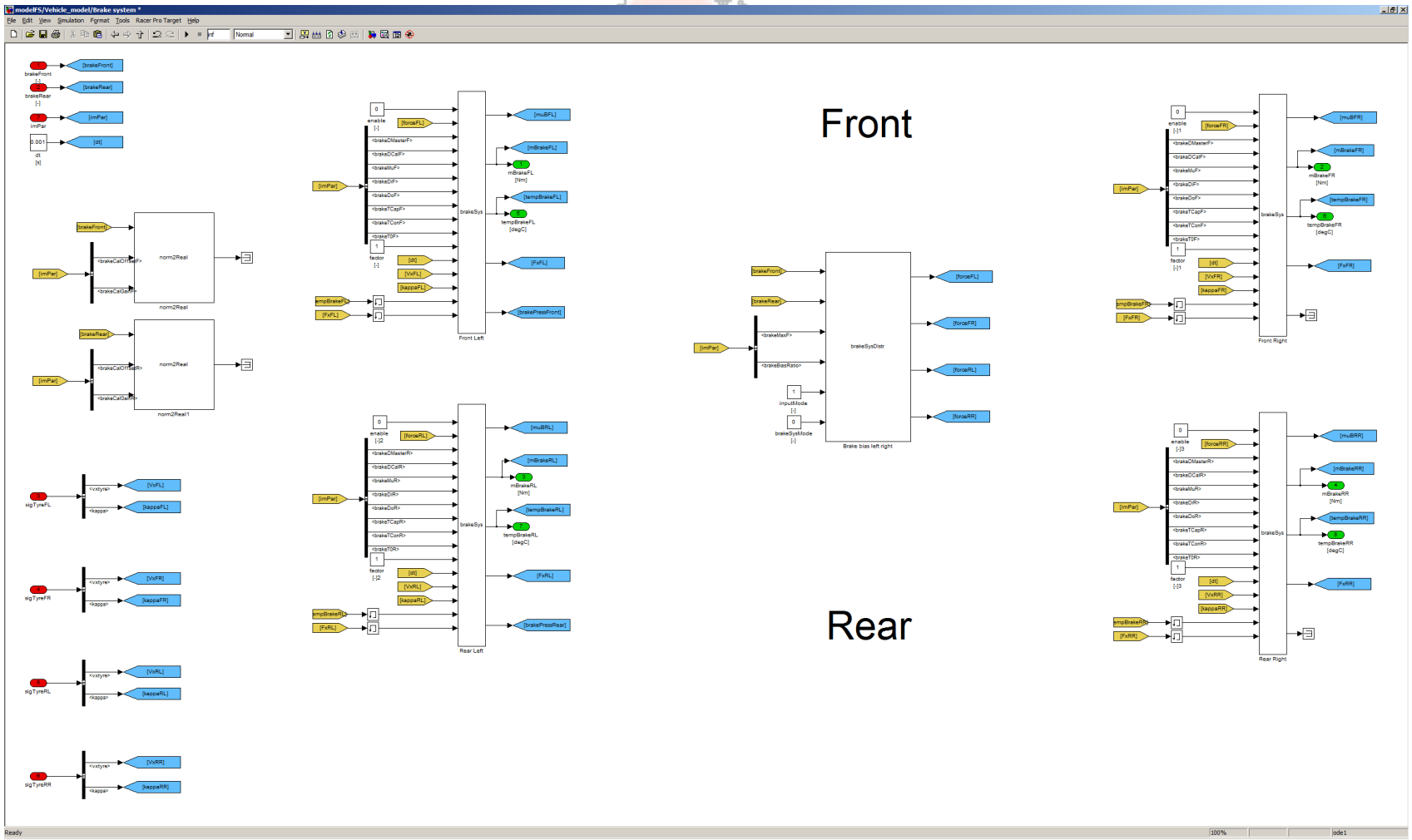

ePhyse – Aerodynamics

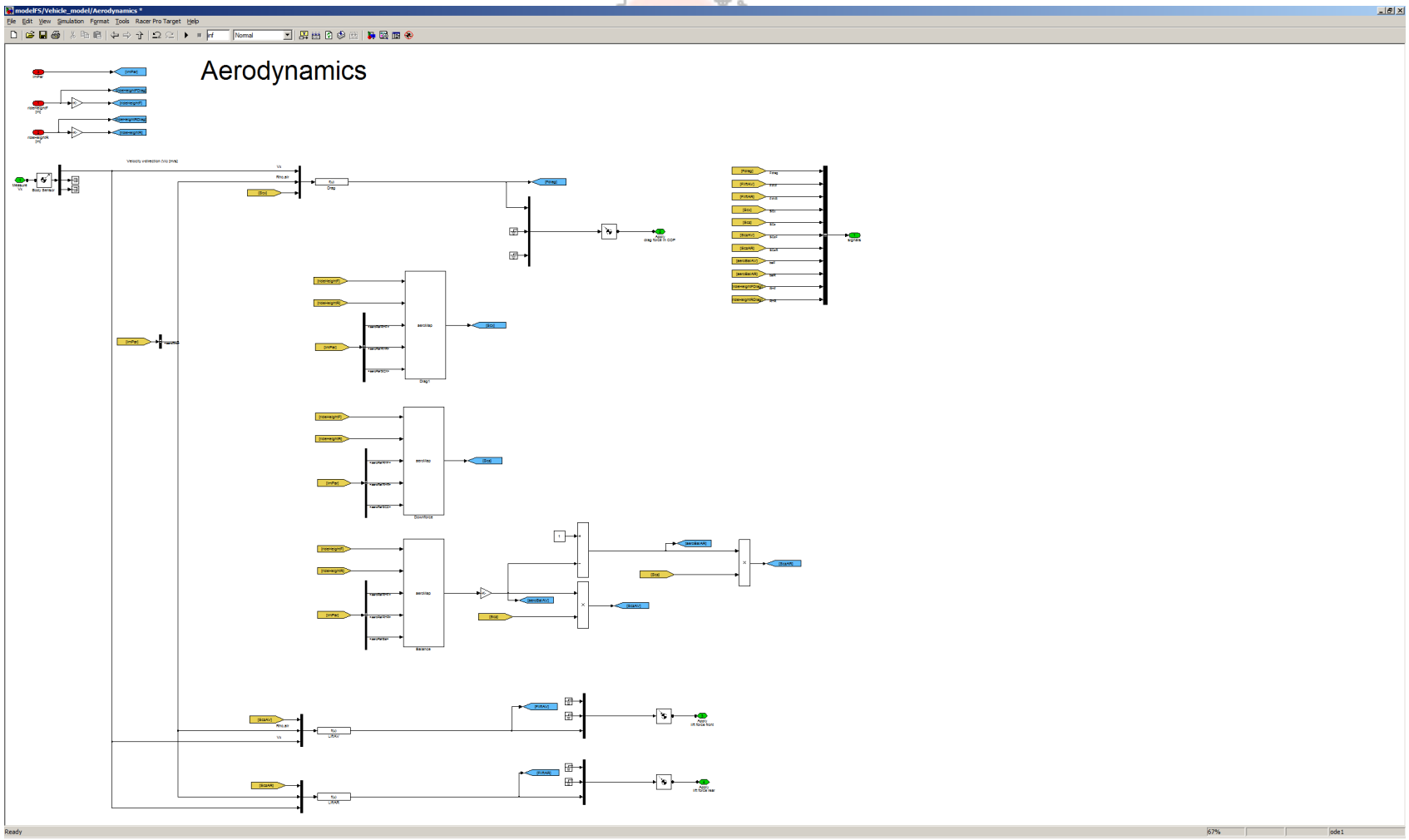

ePhyse Net and other vehicle dynamics software

- ePhyse Net support for commercial VD software natively or trough their S-functions
  - CarSim
  - SIMPACK
  - IPG CarMaker
  - Dymola
  - etc
- As long as the code runs faster than realtime

cruden

IPG Carmaker integrated through ePhyse Net

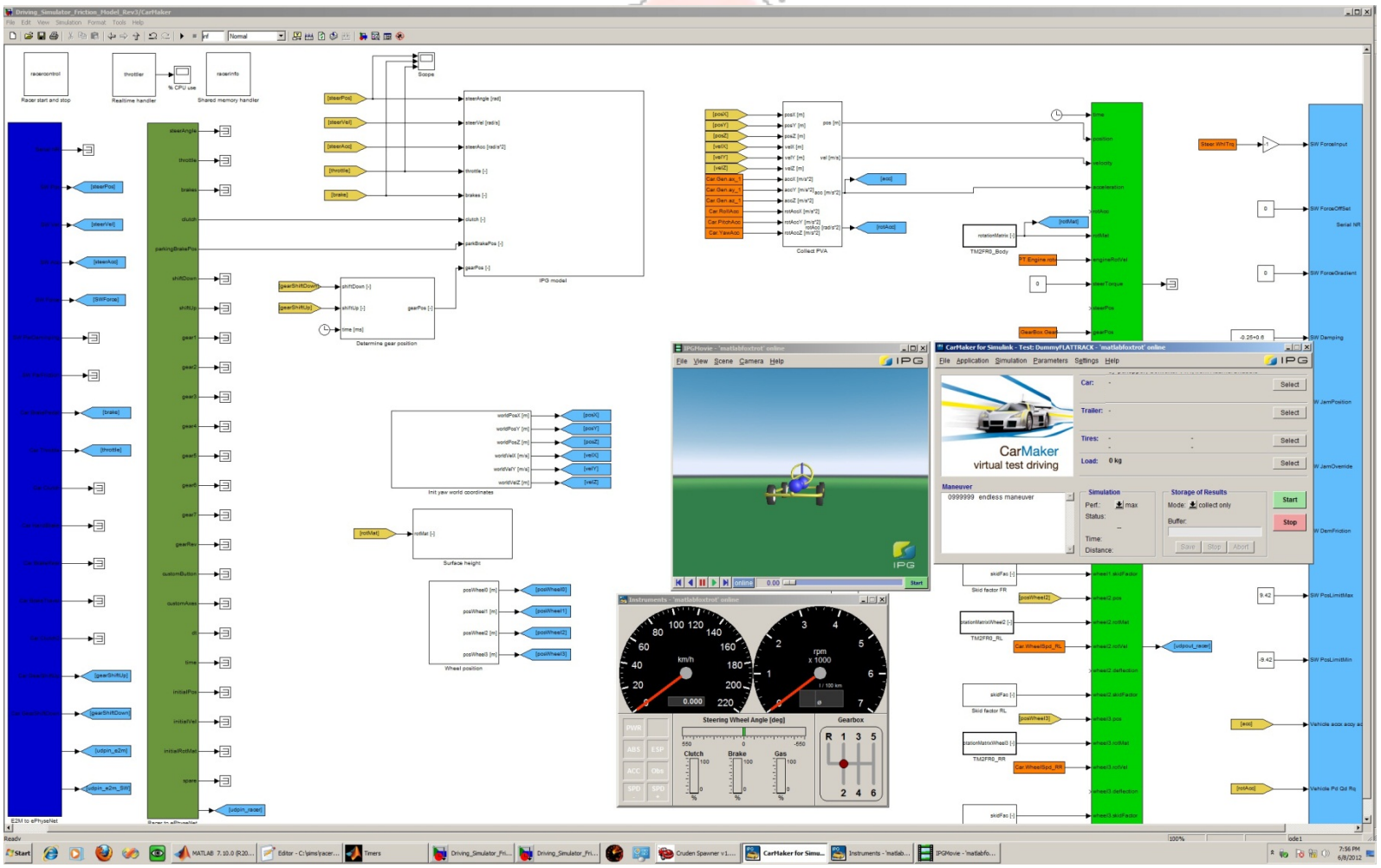

cruden

Thank you for your attention!

Questions?

Hal 1 – Booth V1484

Maarten van Donselaar