Experimental investigation on the dynamic modulus change of Natural Rubber under principal loading modes and different dynamic conditions.

Prepared by: Savaş Kayacı (Presenter), Emre Eşiyok, Murat Cevher

Title: Manager

Department: Engineering

©Laspar Rubber Components & Development

Introduction

Elastomer is a very useful engineering material which is being used in many engineering applications like sealing, anti-vibration, shock isolation, torque transmission, etc. However, its **dynamic mechanical behavior** is hard to predict or estimate. There are certain methods through which engineers can calculate the dynamic mechanical behavior of elastomer but these methods may lead unpredicted results due to the **non-linear material properties of elastomer.**

The aim of present study is to introduce;

1. An experimental methodology to estimate the dynamic modulus change of elastomer indedpenent of geometry under different dynamic conditions and **loading modes i.e. compression, shear, tension.**
2. The change in the dynamic modulus when elastomer is subjected to a set of **repeated loadings under the principle loading modes**.
3. To determine **dimensionless material property constants** to calculate the **dynamic stiffness of a component** under certain dynamic loads.

PS: **Loss angle** is also an important dynamic mechanical behavior of elastomer, but it is out of scope of this study.

©Laspar Rubber Components & Development

Test specimens

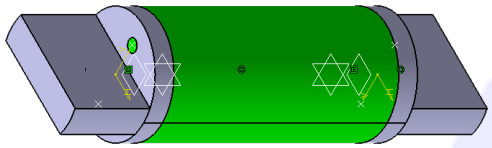

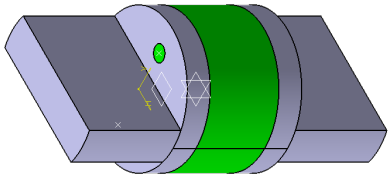

Code:	Test specimen description:
a	Rubber disc(Ø30x15)
b	Bonded rubber disc(Ø30x15)
c	Simple shear specimen
d	Rubber plate(2mm)
e	Longer bonded rubber disc (Ø30x60)

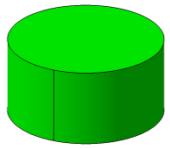

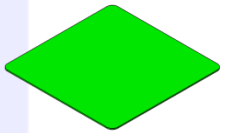

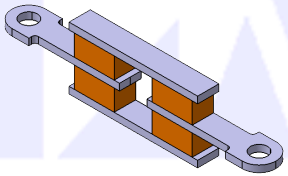

- All test specimens are produced by injection molding using the same press machine
- Dumbbell specimens are cut from rubber plate
- Simple shear specimen is used for both static and dynamic tests
- Bonded rubber discs are used in compressive and tensile dynamic tests according to their lengths

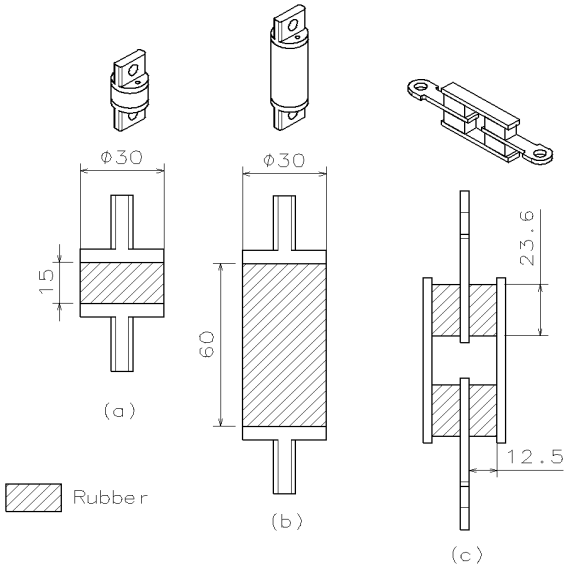

©Laspar Rubber Components & Development

Test Machine and Fixtures

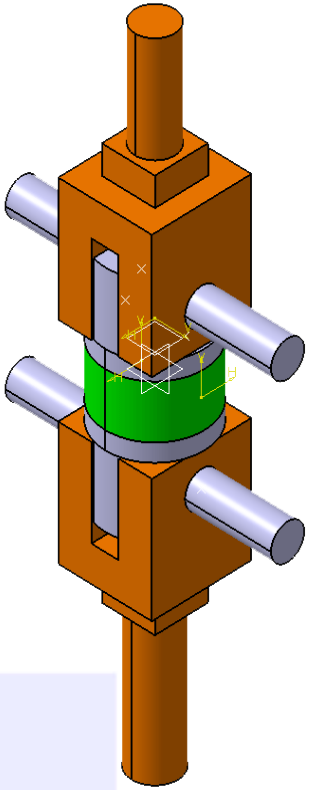

- Static uni-axial tests
  - Stiffness value
  - Input, loss, recovered energy
  - Hysterisis
  - Load-displacement curve
- Dynamic uni-axial tests
  - Dynamic stiffness values
  - Energy
  - Phase angle
  - Damping constant

MTS 831.10 Elastomer test bench is used for all measurements: ±25 kN, 60 mm stroke, maximum 200 Hz frequency.

©Laspar Rubber Components & Development

Test Conditions

Static tests:
- Pre-load: 0 N
- Preconditioning Strain: 0,6
- Number of preconditioning cycles: 3
- Preconditioning speed: 100 mm/min
- Test strain: 0,5
- Test speed: 20 mm/min

Dynamic tests:
- Mean strain: 0,2 / 0,4
- Frequency: 1-101 Hz
- Displacement amplitude: ±2 - ±0,1 mm

Repeated loading tests

#	Loading mode	Mean strain	Dynamic strain amplitude	Frequency (Hz)	# of cycles
a	Comp.	0,2	0,067	5	100000
b	Comp.	0,4	0,067	15	100000
c	Shear	0,2	0,08	5	100000
d	Shear	0,4	0,08	15	100000
e	Tens.	0,2	0,017	5	100000
f	Tens.	0,4	0,017	15	100000

All tests are carried out under room temperature.

©Laspar Rubber Components & Development

Calculations for compressive loading

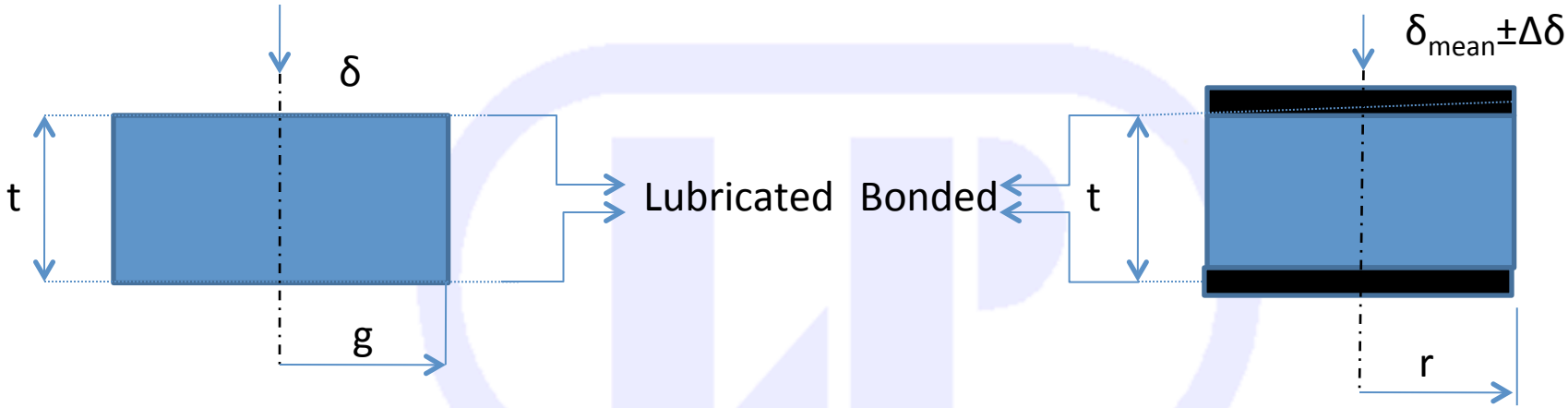

$$K_c = \frac{E_c A}{t}$$

$$K_c^* = \frac{D_c A}{t}$$

Ratio of Dynamic to Static Modulus (RDSM):

$$E_c = E_o\left(1 + 2\phi(SF)^2\right)$$

$$D_c = D_o\left(1 + 2\phi(SF)^2\right)$$

$$SF = \frac{\pi r^2}{2\pi r t}$$

Load area

Bulge area

$$r_c = \frac{D_c}{E_c} = \frac{D_o}{E_o} = \frac{K_c^*}{K_c}$$

The incompressibility coefficient ϕ, and the original compressive modulus E_o are experimentally obtained. In order to obtain these coefficients an unbonded cylindrical rubber block -whose diameter and height are 30mm and 15mm, respectively- is subjected to a compressive load.

©Laspar Rubber Components & Development

Calculations for shear loading

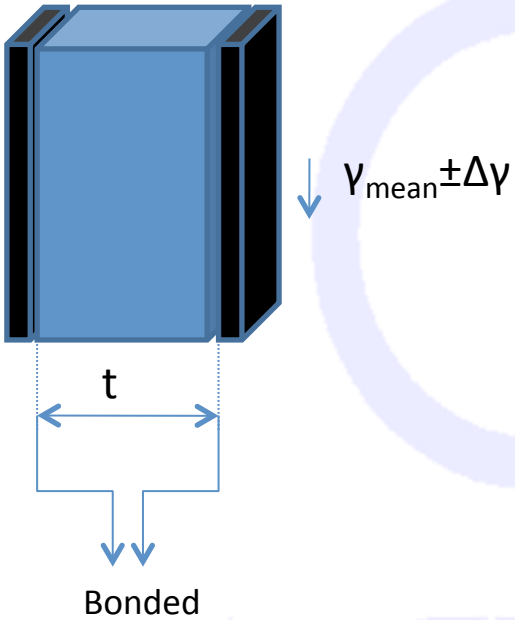

$$K_s = \frac{GA}{t}$$

G: static shear modulus,
A: area at which the load is being applied,
t: the height of the rubber block.

$$K_s^* = \frac{G^* A}{t}$$

G^*: dynamic shear modulus,
A: area at which the load is being applied,
t: the height of the rubber block.

Ratio of Dynamic to Static Modulus (RDSM):

$$r_s = \frac{G^*}{G} = \frac{K_s^*}{K_s}$$

©Laspar Rubber Components & Development

Calculations for tensile loading

$$K_t = \frac{E_t A}{t}$$

E_t: static tensile modulus,
A: area at which the load is being applied,
t: the height of the rubber block.

$$K_t^* = \frac{E_t^* A}{t}$$

E_t^*: dynamic shear modulus,
A: area at which the load is being applied,
t: the height of the rubber block.

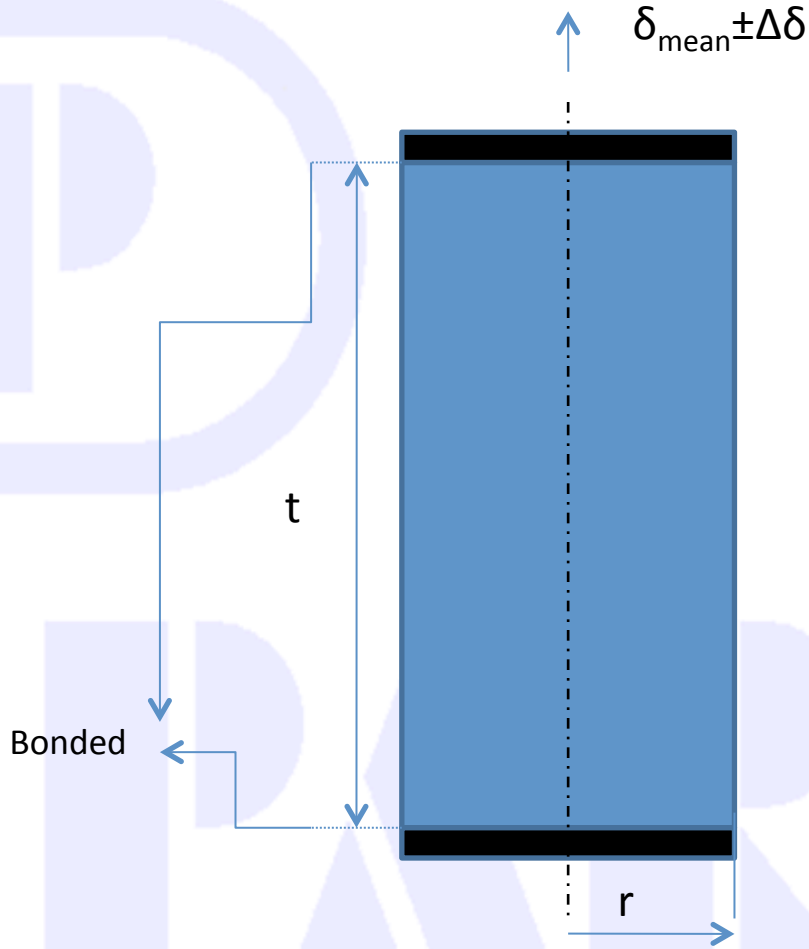

Ratio of Dynamic to Static Modulus (RDSM):

$$r_t = \frac{E_t^*}{E_t} = \frac{K_t^*}{K_t}$$

©Laspar Rubber Components & Development

Results for compressive loading

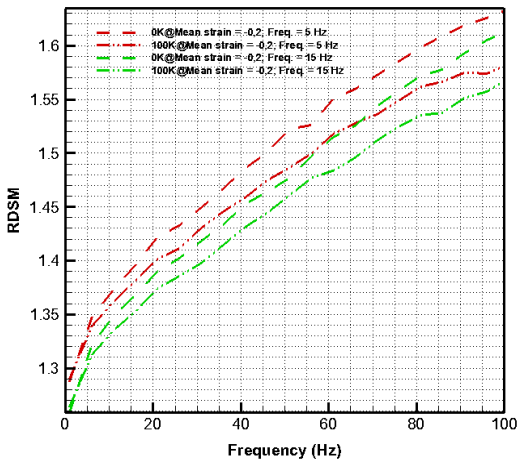

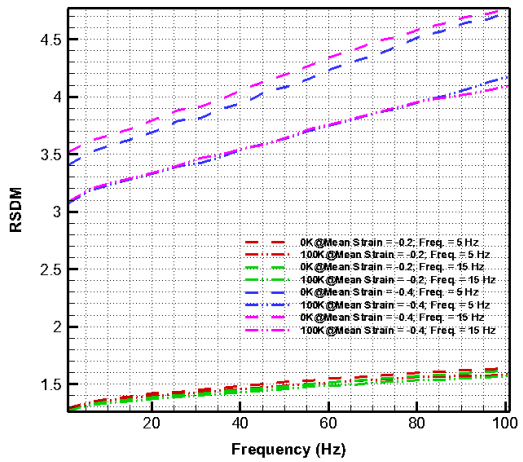

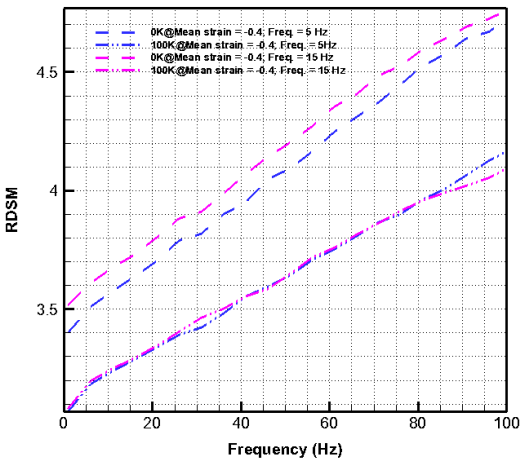

$$D_o = \left(A + Bf + Cf^2\right)E_o$$

Cyclic test conditions	# of cycles	A	B	C	Area (unit^2)	Change in area (%)
	0K	1,3252	4,4979e-3	-1,4140e-5	1,5050e2	
ε_m=-0,2; f=5Hz	100K	1,3118	4,3247e-3	-1,6132e-5	1,4767e2	**-1,88**
	0K	1,3035	3,9639e-3	-8,6548e-6	1,4750e2	
ε_m=-0,2; f=15Hz	100K	1,2917	3,8796e-3	-1,1308e-5	1,4500e2	**-1,69**
	0K	3,4086	1,4071e-2	-7,2366e-6	4,1023e2	
ε_m=-0,4; f=5Hz	100K	3,0998	1,0979e-2	-3,9527e-6	3,6471e2	**-11,09**
	0K	3,5010	1,5018e-2	-2,1898e-5	4,1922e2	
ε_m=-0,4; f=15Hz	100K	3,1001	1,2161e-2	-2,1844e-5	3,6461e2	**-13,03**

©Laspar Rubber Components & Development

Results for shear loading

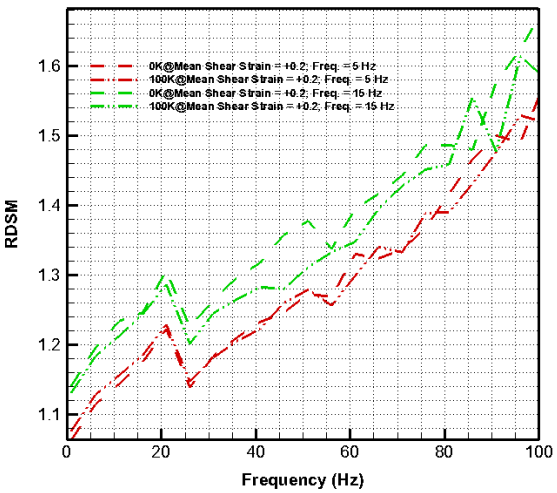

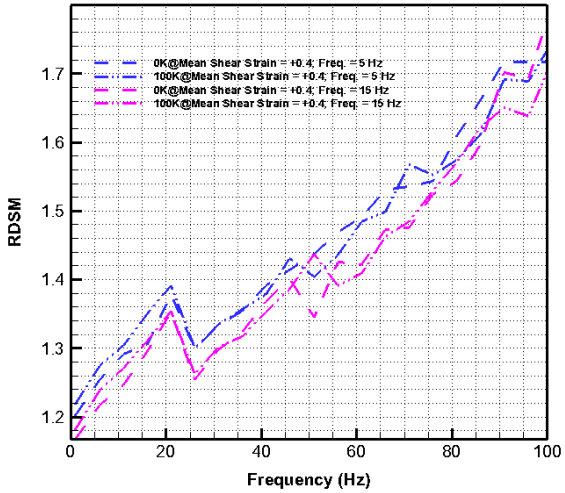

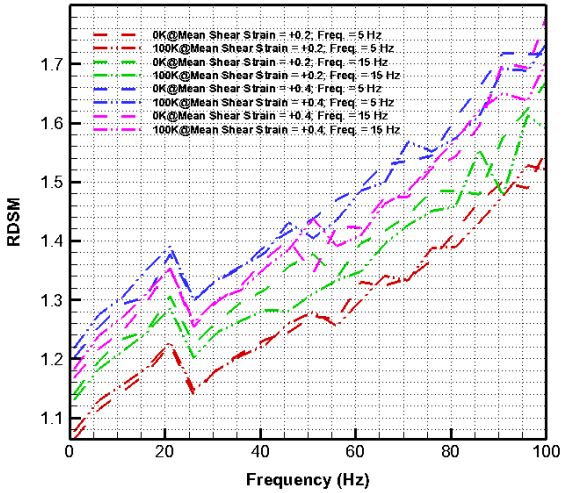

$$G^* = \left(A + Bf + Cf^2\right)G$$

Cyclic test conditions	# of cycles	A	B	C	Area (unit²)	Change in area (%)
	0K	1,1080	1,8390e-3	2,4753e-5	1,2875e2	
γ_m=+0,2; *f*=5Hz	100K	1,1212	1,5610e-3	2,4492e-5	1,2865e2	**-0,08**
	0K	1,1909	1,9279e-3	2,5903e-5	1,3734e2	
γ_m=+0,2; *f*=15Hz	100K	1,1765	1,4696e-3	2,7023e-5	1,3460e2	**-2,00**
	0K	1,2370	2,9417e-3	2,0581e-5	1,4594e2	
γ_m=+0,4; *f*=5Hz	100K	1,2683	1,7353e-3	2,8399e-5	1,4555e2	**+0,14**
	0K	1,2273	1,0540e-3	4,0894e-5	1,4220e2	
γ_m=+0,4; *f*=15Hz	100K	1,2327	1,7216e-3	2,9204e-5	1,4218e2	**-0,01**

©Laspar Rubber Components & Development

Results for tensile loading

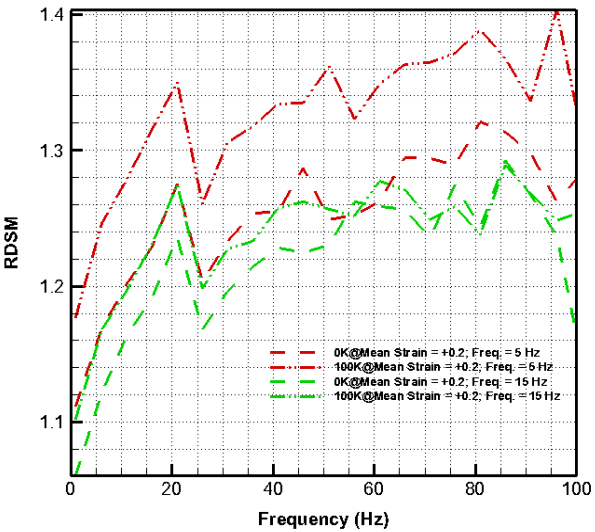

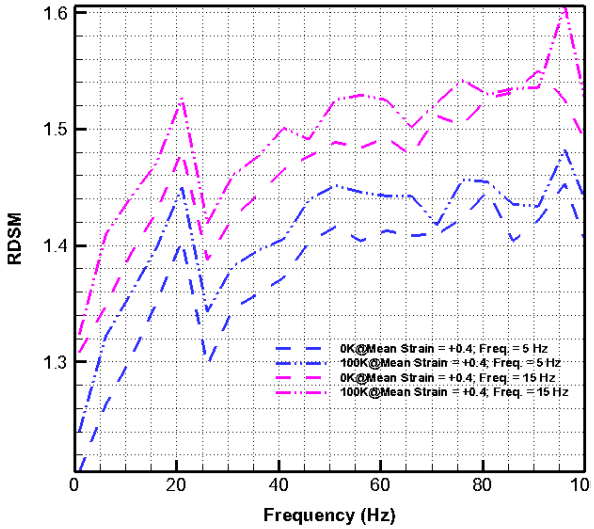

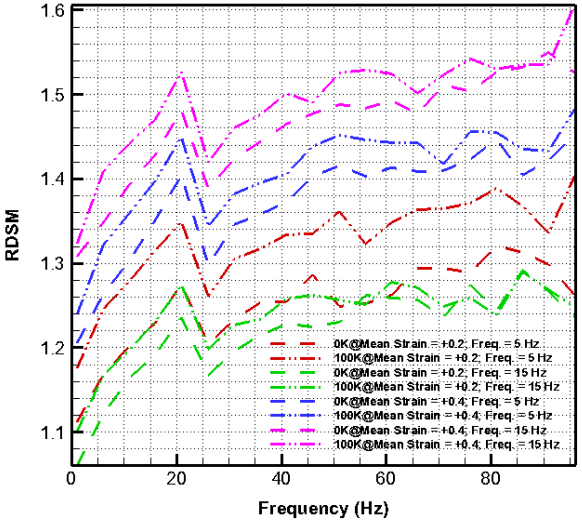

$$E_t^* = \left(e^{(A\log f + B)}\right)E_t$$

Cyclic test conditions	# of cycles	A	B	Area (unit^2)	Change in area (%)
	0K	3,3088e-2	1,0749e-1	1,2569e2	
ε_m=+0,2; *f*=5Hz	100K	2,8431e-2	1,8137e-1	1,3307e2	**+5,87**
	0K	3,5538e-2	6,6184e-2	1,2203e2	
ε_m=+0,2; *f*=15Hz	100K	2,8486e-2	1,1145e-1	1,2417e2	**+1,75**
	0K	3,8455e-2	1,8082e-1	1,3799e2	
ε_m=+0,4; *f*=5Hz	100K	2,8355e-2	2,4342e-1	1,4145e2	**+2,51**
	0K	4,2367e-2	2,2606e-1	1,4668e2	
ε_m=+0,4; *f*=15Hz	100K	3,4886e-2	2,7491e-1	1,4981e2	**+2,13**

©Laspar Rubber Components & Development

FEM analysis of simple shear test specimen

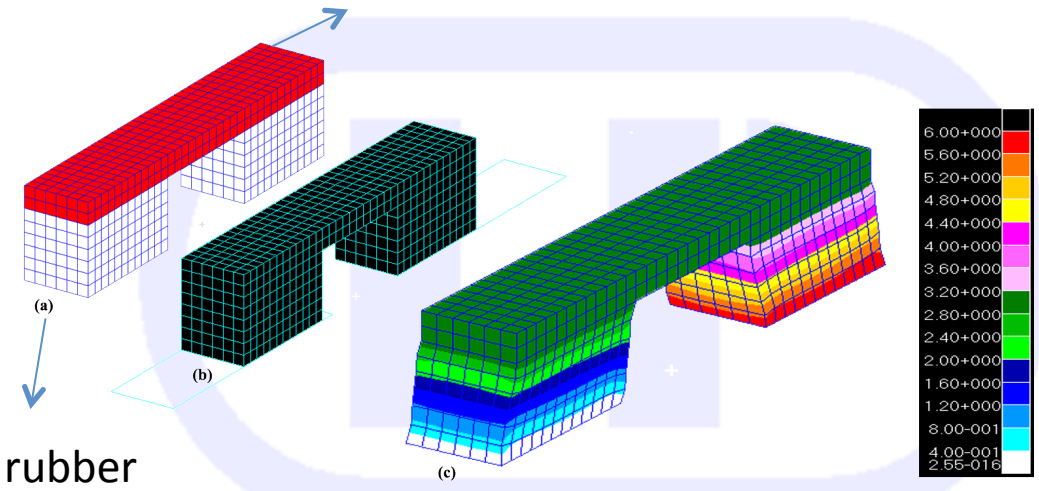

rubber

Property	f (Hz) 6	26	51	76	96
K_s^*(N/mm)	16,03	16,74	18,16	19,86	21,62
K_s(N/mm)	14,6	14,6	14,6	14,6	14,6
r_s(calculated)	1,10	1,14	1,24	1,36	1,48
r_s(measured)	1,12	1,17	1,27	1,39	1,51
Error (%)	**-1,8**	**-2,6**	**-1,6**	**-2,2**	**-2,0**

©Laspar Rubber Components & Development

Benchmark Study

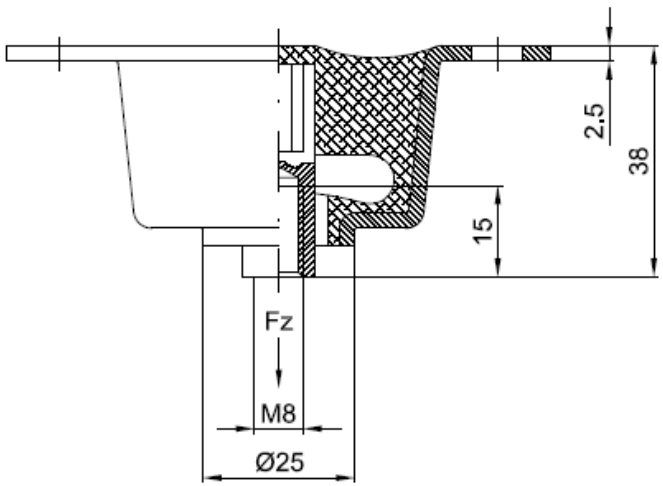

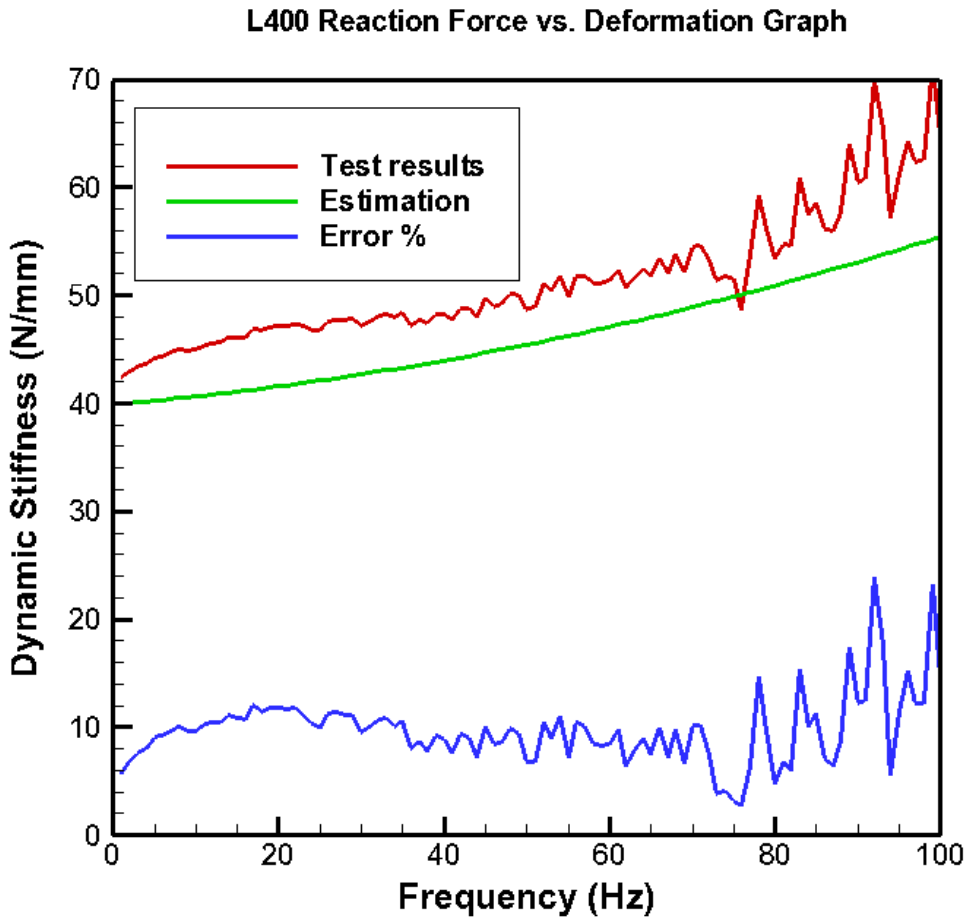

©Laspar Rubber Components & Development

Conclusions

- Frequency, loading mode and mean strain dependency of dynamic modulii of an elastomer compound is obtained (RDSM).
- The change in the dynamic mechanical behavior of elastomer material through a set of repetitive cyclic load is obtained independent of geometric features.

©Laspar Rubber Components & Development